DINGLI

Exceed · New Height

Parts Manual

BA16NE

BA18NE

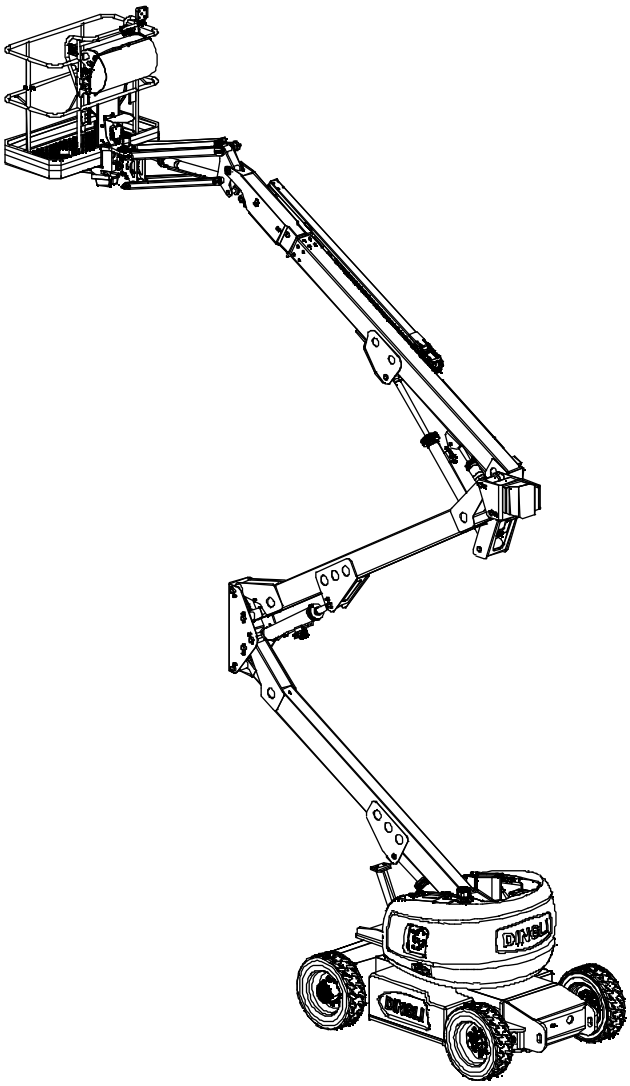

CE

Part Number: SM042220111
Version Number: Rev1.1
November 2023 Printing

DINGLI

Version of the Record

Version Number	Create Date
SM042220111_Rev1.0	2022-11
SM042220111_Rev1.1	2023-02

Foreword

We are very appreciated for your interesting with Dingli machine and choosing it for your application. Our priority above all is you can use the machine safely for your application and you can benefit from the Dingli machine mostly. For these reason we hope you can:

1. Comply with employer, job site and local governmental rules.

2. Safeguard your commitment to quality by always using genuine Dingli spare parts. Remember, Dingli cannot accept responsibility for the failure of a separator equipped with non-original spare parts. We guarantee the quality and reliability of our products.

3. All sketch maps of parts shown in this manual are for reference only, it is the practical that counts. This manual includes all the latest information up to the date when it was printed. All responsibilities for the revision and explanation of the manual rest with the Dingli. We also preserve the right to edit the technology characteristic and content of the manual.

4. Anyone who read the manual or used the machine, is encouraged to notify Dingli Machinery Co, Ltd of any errors or send in suggestions for improvement. All communications will be carefully considered for future printings of this and other manuals, certainly if you have any question about the machine, please contact with our team by dialing technical support phone, sending email, or any methods you want, etc. Our contact information as bellow:

If you are in China Mainland, Please contact with:

Zhejiang Dingli Machinery Co.,Ltd. Domestic Office:

Phone: +86 572 8681766

Fax: +86 572 8681700

Email: sales@cndingli.com

If you are out of the China Mainland, Please contact with:

Zhejiang Dingli Machinery Co.,Ltd. International Office:

Phone: +86 572 8681688

Fax: +86 572 8681690

Email: export@cndingli.com

Table of Contents

Section 1 Chassis

1-1 Steer Cylinder Assembly Installations 2
1-2 Left Hub Assembly 4
1-3 Right Hub Assembly 6
1-4 Tire and Wheel Installations (Front Axle) 8
1-5 Tire and Wheel Installations (Rear Axle) 10
1-6 Slewing Ring Installations 12
1-7 Slew Drive Assembly 14
1-8 Rear Axle Accessory Installations 16
1-9 Hydraulic Tank Assembly Installations 18
1-10 Lithium Battery Installations 20
1-11 Steer Control Manifold Assembly Installations 22
1-12 Steer Control Manifold Assembly 24
1-13 Hood Assembly Installations 26
1-14 Chassis Components 28

Section 2 Turntable

2-1 Turntable Accessories Installations 1 31
2-2 Turntable Accessories Installations 2 34
2-3 Releasing Manifold 37
2-4 Synchronous Manifold Assembly 39
2-5 Functional Manifold Assembly 41
2-6 Turntable Left Hood Bracket Installations 43
2-7 Left Hood Assembly 45
2-8 Turntable Right Hood Bracket Installations 47
2-9 Right Hood Assembly 49
2-10 Counterweight Installations 51

Section 3 Boom

3-1 Crank Arm 1 Installations 54
3-2 Rod, Connection 1 Installations 56
3-3 Crank Arm 2 Installations 58
3-4 Rod, Connection 2 Installations 60
3-5 Cage, Connection Accessories Installations 62
3-6 Telescopic Boom 64
3-7 Base Boom Sliding Block Installations 66

3-8 Second Boom Sliding Block Installations 68
3-9 Telescope Cylinder Assembly Installations 70
3-10 Carrier System Installations....72
3-11 Base Boom Accessories Installations....74
3-12 Upper Lifting Cylinder Assembly Installations 76
3-13 Master Cylinder Assembly Installations....78
3-14 Slave Cylinder Assembly Installations 80
3-15 Articulating JIB Installations....82
3-16 Rotate Cylinder Assembly Installations 84
3-17 Articulating JIB Valve Block Installations....86
3-18 Directional Valve Assembly 88
3-19 Directional Valve Assembly 90

Section 4 Platform

4-1 Platform Installations 93
4-2 Platform Assembly 95
4-3 Gate Assembly 97
4-4 Lift Guard Contact Alarm 99

Section 5 Cylinder

5-1 Steer Cylinder Assembly 102
5-2 Lower Lifting Cylinder Assembly 104
5-3 Mid Lifting Cylinder Assembly....106
5-4 Telescope Cylinder Assembly 108
5-5 Upper Lifting Cylinder Assembly 110
5-6 Master Cylinder Assembly 112
5-7 Slave Cylinder Assembly 114
5-8 Jib Cylinder Assembly 116

Section 6 Hydraulic System

6-1 Suction-Return System 119
6-2 Functional Hydraulic Circuit....121

Section 7 Electrical System

7-1 Electrical Harness (Lithium Battery)....125
7-2 Ground Control Box Assembly 128
7-3 Platform Control Box Assembly 131

Section 8 Decals

8-1 Decals with Words 135
8-2 Decals with Symbols 139

Section 9 Special Options

9-1 Battery Installations.....144
9-2 Electrical Harness (Battery).....146

Section 1
Chassis

1-1 Steer Cylinder Assembly Installations

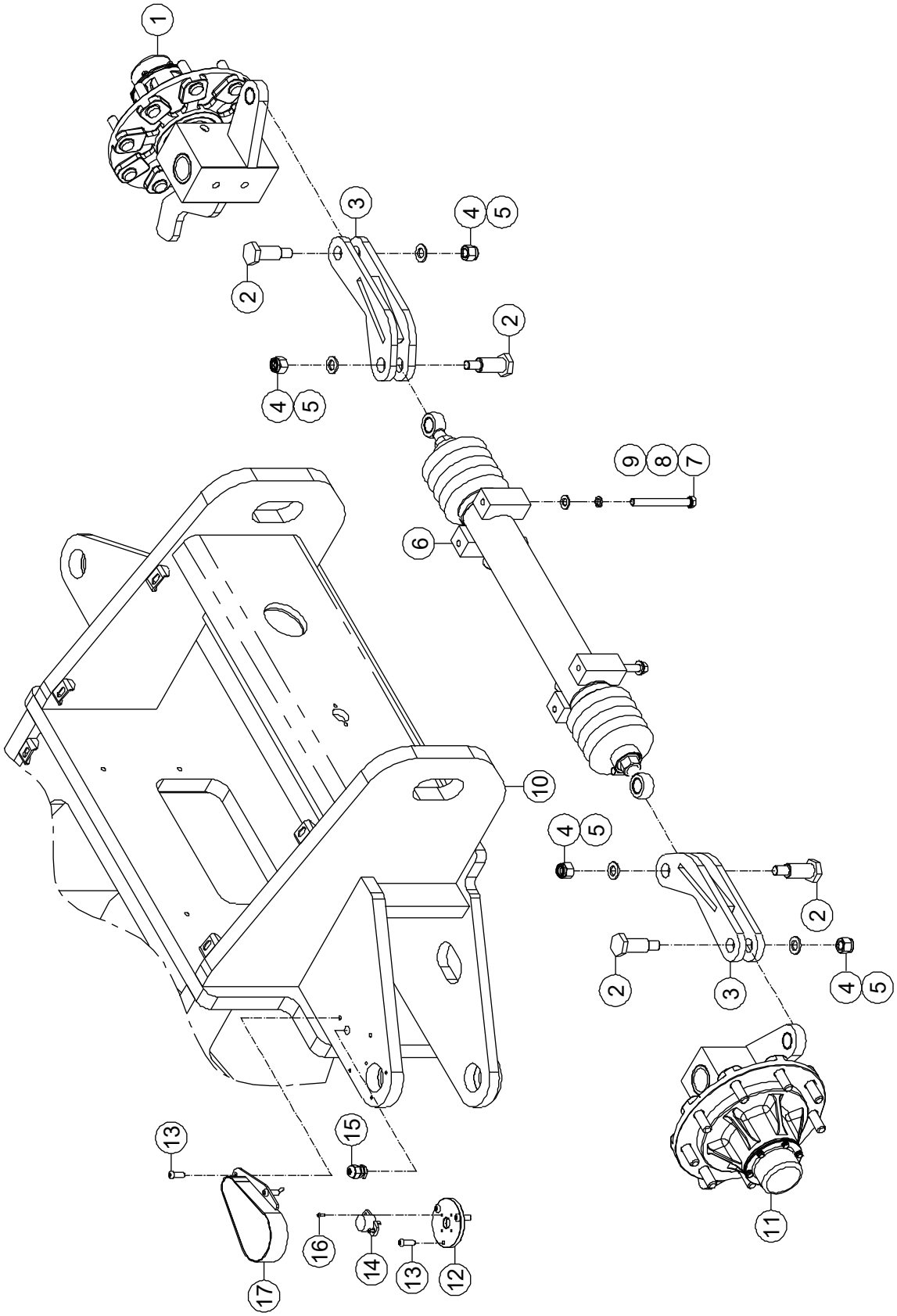

1-1 Steer Cylinder Assembly Installations

Item	Part Number	Description	Qty.	Remark
1		Left Hub Assembly *(Refer to 1-2)*	1	
2	50000921	Pin, Pivot	4	
3	50000926	Tie-Rod	2	
4	00001257	Nut GB/T 6182 M16	4	
5	00000997	Flat Washer GB/T 97.1 16	4	
6		Steer Cylinder Assembly *(Refer to 5-1)*	1	
7	00002045	Bolt GB/T 5783 M12 × 120	4	
8	00000815	Spring Washer GB/T 93 12	4	
9	00000814	Flat Washer GB/T 97.1 12	4	
10	50000889	Chassis	1	BA16NE
	50001034	Chassis	1	BA18NE
11		Right Hub Assembly *(Refer to 1-3)*	1	
12	50003107	Bracket, Supporting Rotary Sensor	1	
13	00001189	Screw GB/T 70.2 M8×25	6	
14	00000644	Sensor, Rotary	1	
15	00001826	M16 Clamp	1	
16	00001214	Screw GB/T 70.2 M4×10	2	
17	50003109	Shield, Rotary Sensor	1	

1-2 Left Hub Assembly

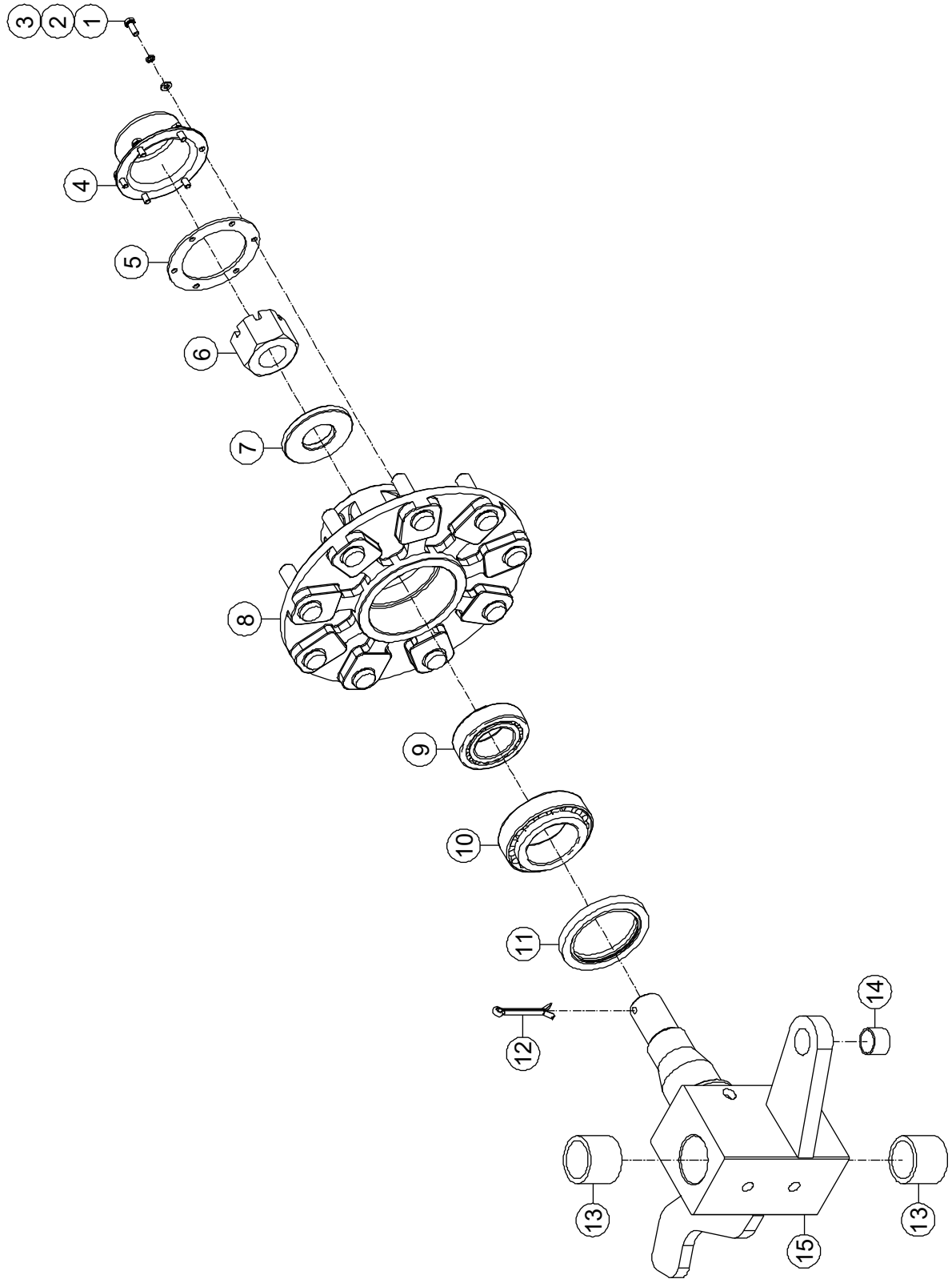

1-2 Left Hub Assembly

Item	Part Number	Description	Qty.	Remark
1	00000818	Bolt GB/T 5783 M6 × 16	6	
2	00000621	Spring Washer GB/T 93 6	6	
3	00000620	Flat Washer GB/T 97.1 6	6	
4	50001008	Dust Cap	1	
5	50003044	Plate, Seal	1	
6	00002034	Nut GB/T 6179 M36	1	
7	50000987	Ring, Check	1	
8	50002142	Housing	1	
9	00001139	Bushing 33109	1	
10	00001141	Bushing 33112	1	
11	50000038	Seal, Lip	1	
12	00002038	Pin, Cotter GB/T 91 6,3 × 63	1	
13	00000419	8813-405040 Sleeve Bearing	2	
14	00000364	8812-242820 Sleeve Bearing	1	
15	50000923	Spindle Weldment (Left Side)	1	

1-3 Right Hub Assembly

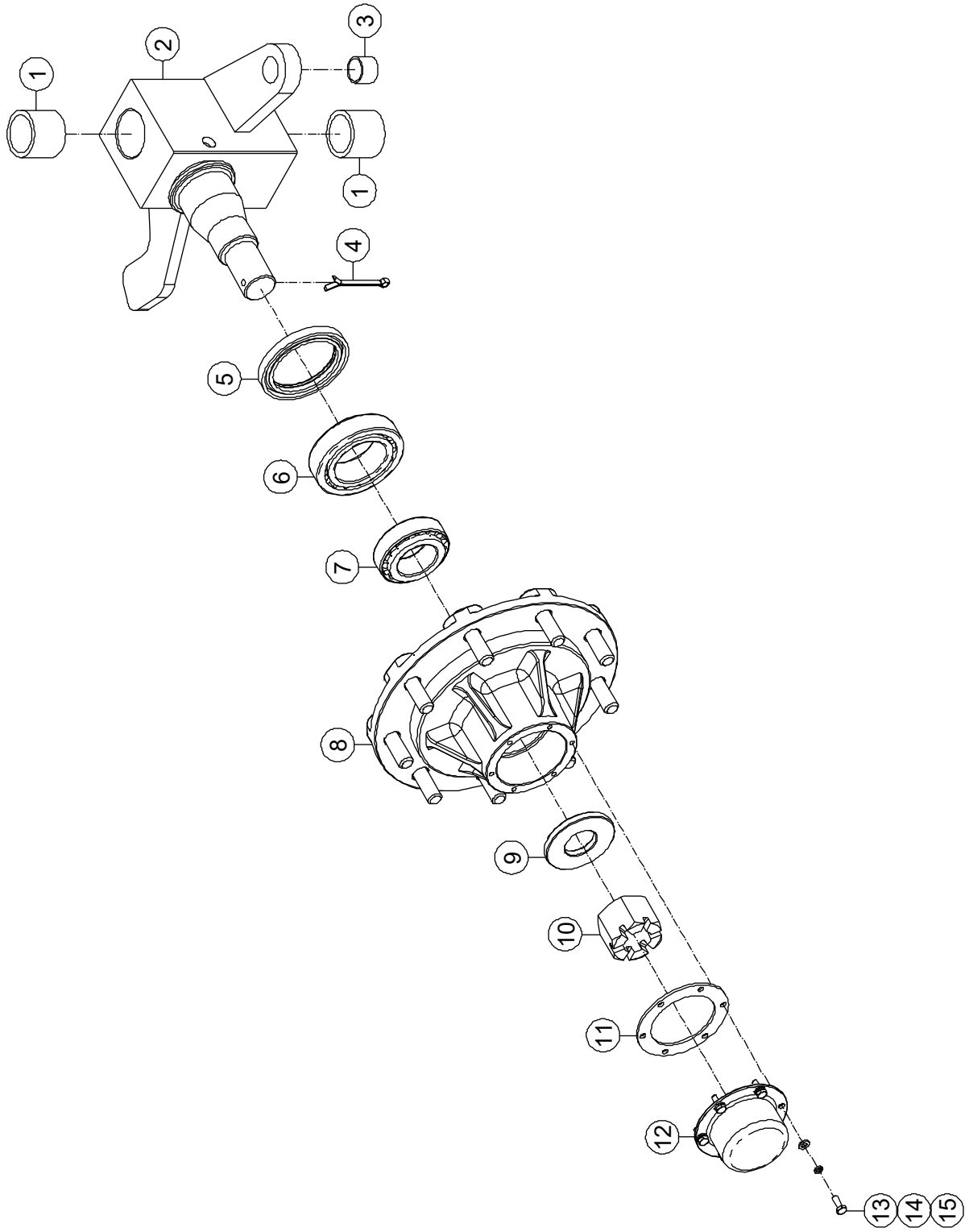

1-3 Right Hub Assembly

Item	Part Number	Description	Qty.	Remark
1	00000419	8813-405040 Sleeve Bearing	2	
2	50000925	Spindle Weldment (Right Side)	1	
3	00000364	8812-242820 Sleeve Bearing	1	
4	00002038	Pin, Cotter GB/T 91 6,3 × 63	1	
5	50000038	Seal, Lip	1	
6	00001141	Bushing 33112	1	
7	00001139	Bushing 33109	1	
8	50002142	Housing	1	
9	50000987	Ring, Check	1	
10	00002034	Nut GB/T 6179 M36	1	
11	50003044	Plate, Seal	1	
12	50001008	Dust Cap	1	
13	00000818	Bolt GB/T 5783 M6 × 16	6	
14	00000621	Spring Washer GB/T 93 6	6	
15	00000620	Flat Washer GB/T 97.1 6	6	

1-4 Tire and Wheel Installations (Front Axle)

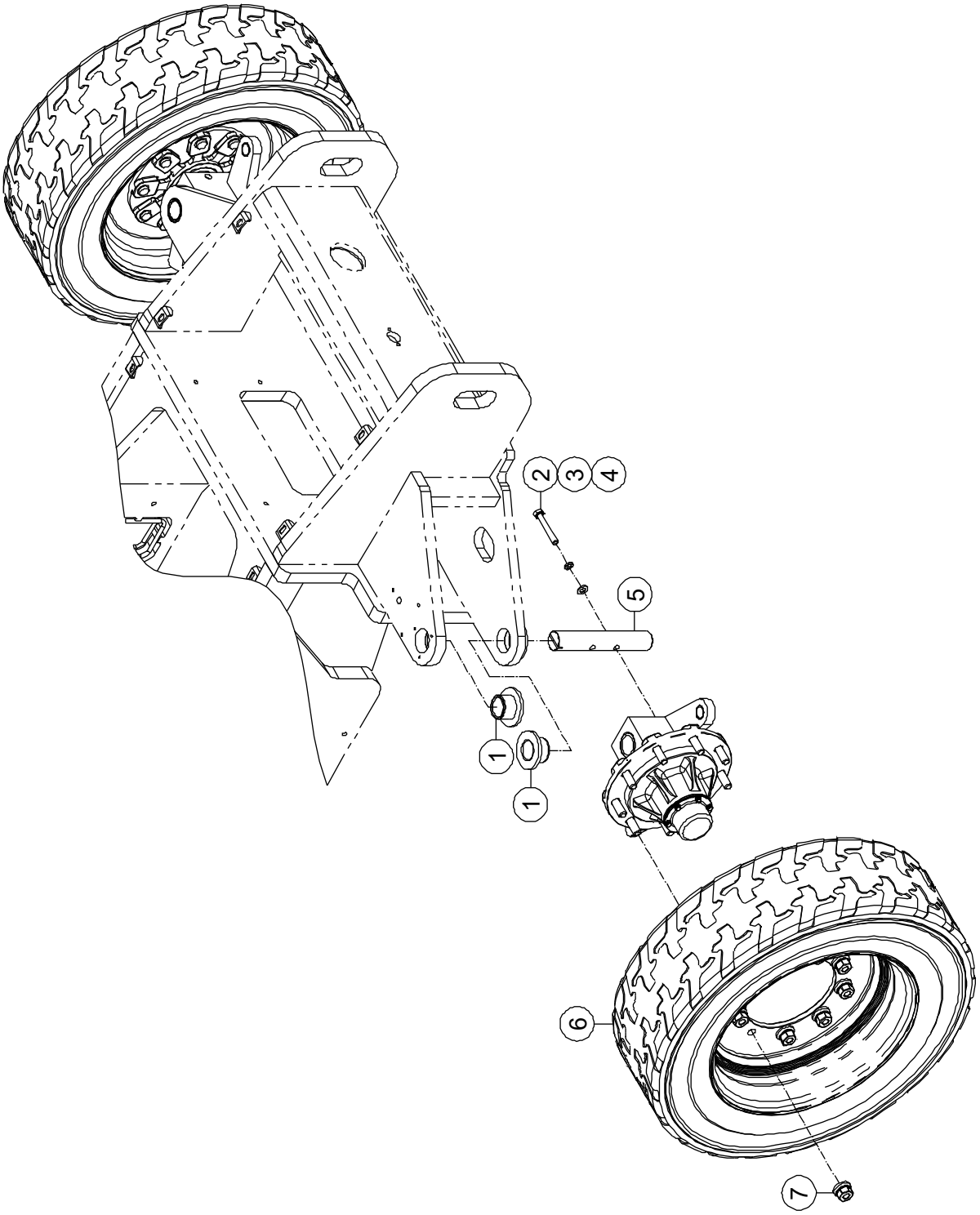

1-4 Tire and Wheel Installations (Front Axle)

Item	Part Number	Description	Qty.	Remark
1	50003106	Flange Bearing	4	
2	00002527	Bolt GB/T 5782 M12 × 80	4	
3	00000815	Spring Washer GB/T 93 12	4	
4	00000814	Flat Washer GB/T 97.1 12	4	
5	50003105	Pin, Pivot	2	
6	00001973	Tire and Wheel Assembly	2	
7	00002274	5/8-18UNF Nut	18	

1-5 Tire and Wheel Installations (Rear Axle)

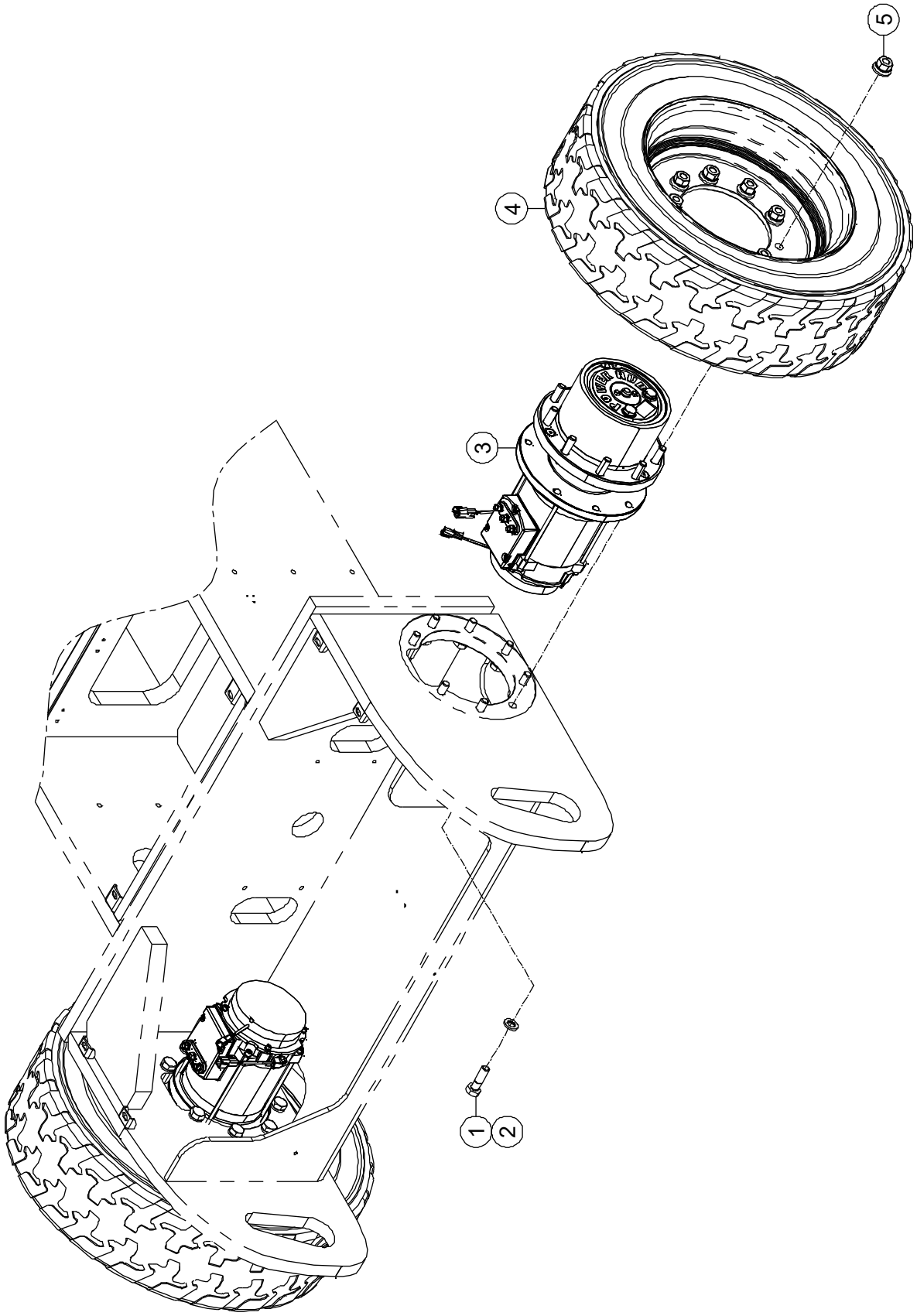

1-5 Tire and Wheel Installations (Rear Axle)

Item	Part Number	Description	Qty.	Remark
1	00001234	5/8-11 × 2 1/4" Heavy Hex Bolt ANSI B18.2.1	16	
2	00001102	Flat Washer 16 JB/ZQ 4080-2006	16	
3	00000526	Drive Motor Assembly	2	
--	00003669	Motor	1	
--	00003670	Reducer	1	
--	00003671	Brake	1	
4	00001973	Tire and Wheel Assembly	2	
5	00002274	5/8-18UNF Nut	18	

1-6 Slewing Ring Installations

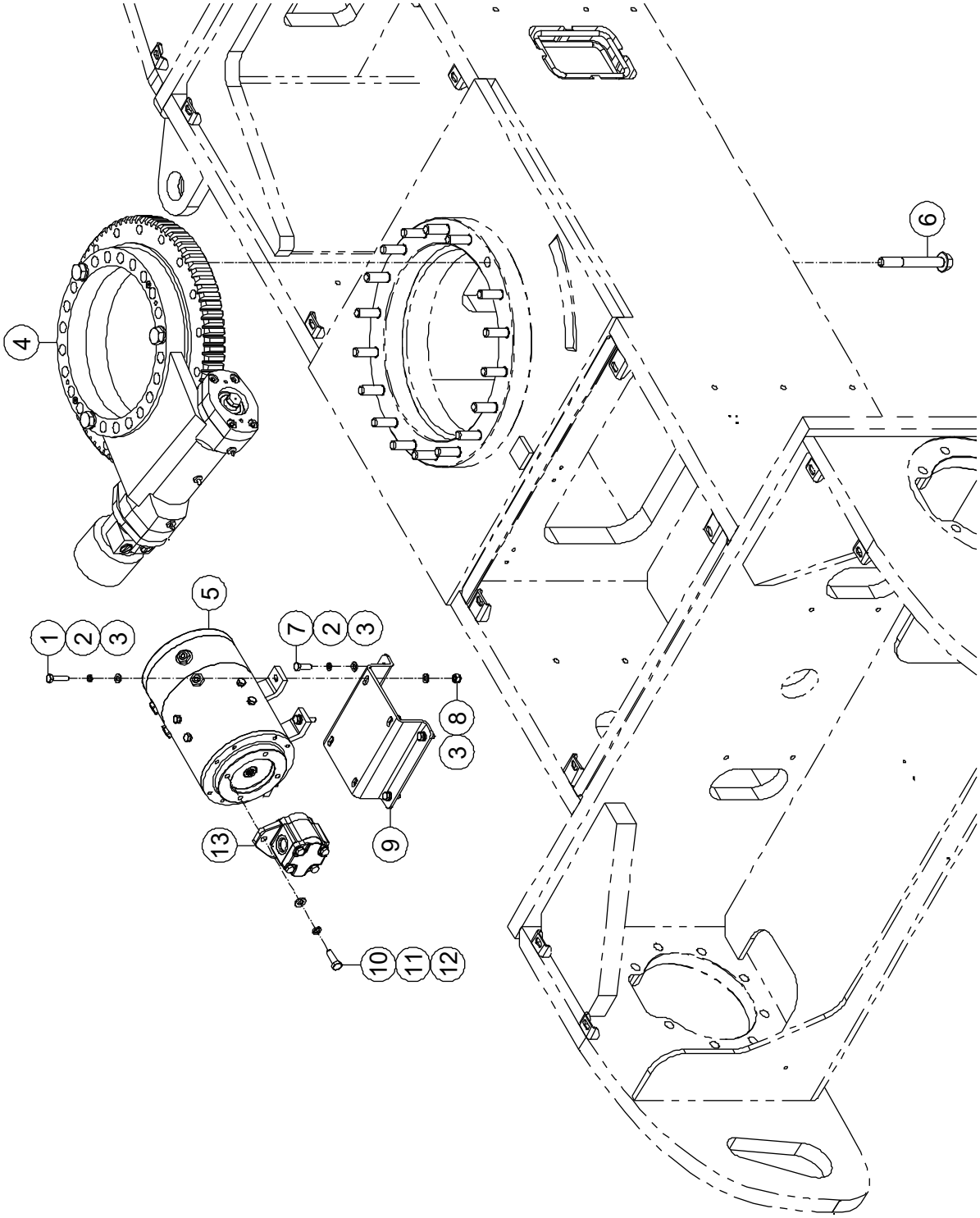

1-6 Slewing Ring Installations

Item	Part Number	Description	Qty.	Remark
1	00002488	Bolt GB/T 5783 M8 × 35	4	
2	00000609	Spring Washer GB/T 93 8	8	
3	00000608	Flat Washer GB/T 97.1 8	12	
4	00006965	Slew Drive Assembly *(Refer to 1-7)*	1	
5	00001304	Electrical Motor	1	
6	00002054	Bolt GB/T 5789 M16 × 130	18	
7	00000993	Bolt GB/T 5783 M8 × 25	4	
8	00001163	Nut GB/T 6182 M8	4	
9	50000972	Bracket	1	
10	00000683	Bolt GB/T 5783 M10 × 30	2	
11	00000679	Spring Washer GB/T 93 10	2	
12	00000615	Flat Washer GB/T 97.1 10	2	
13	00000529	Gear pump	1	

1-7 Slew Drive Assembly

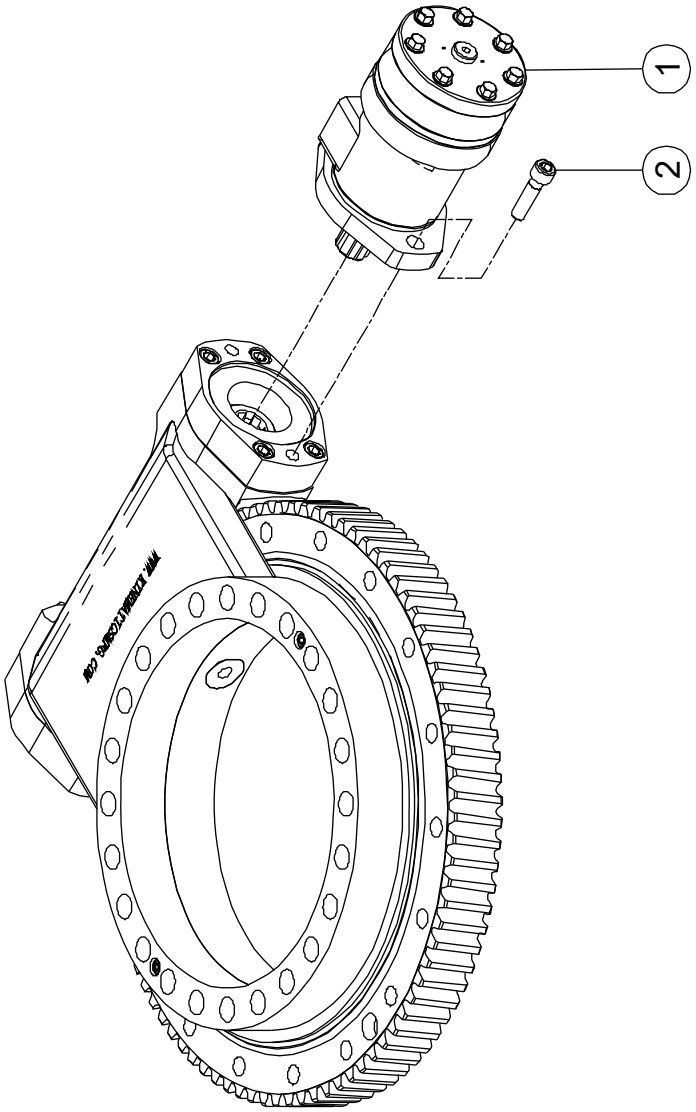

1-7 Slew Drive Assembly

Item	Part Number	Description	Qty.	Remark
1	00006967	Hydraulic Motor	1	
2	00002050	Screw GB/T 70 M10 × 40	2	

1-8 Rear Axle Accessory Installations

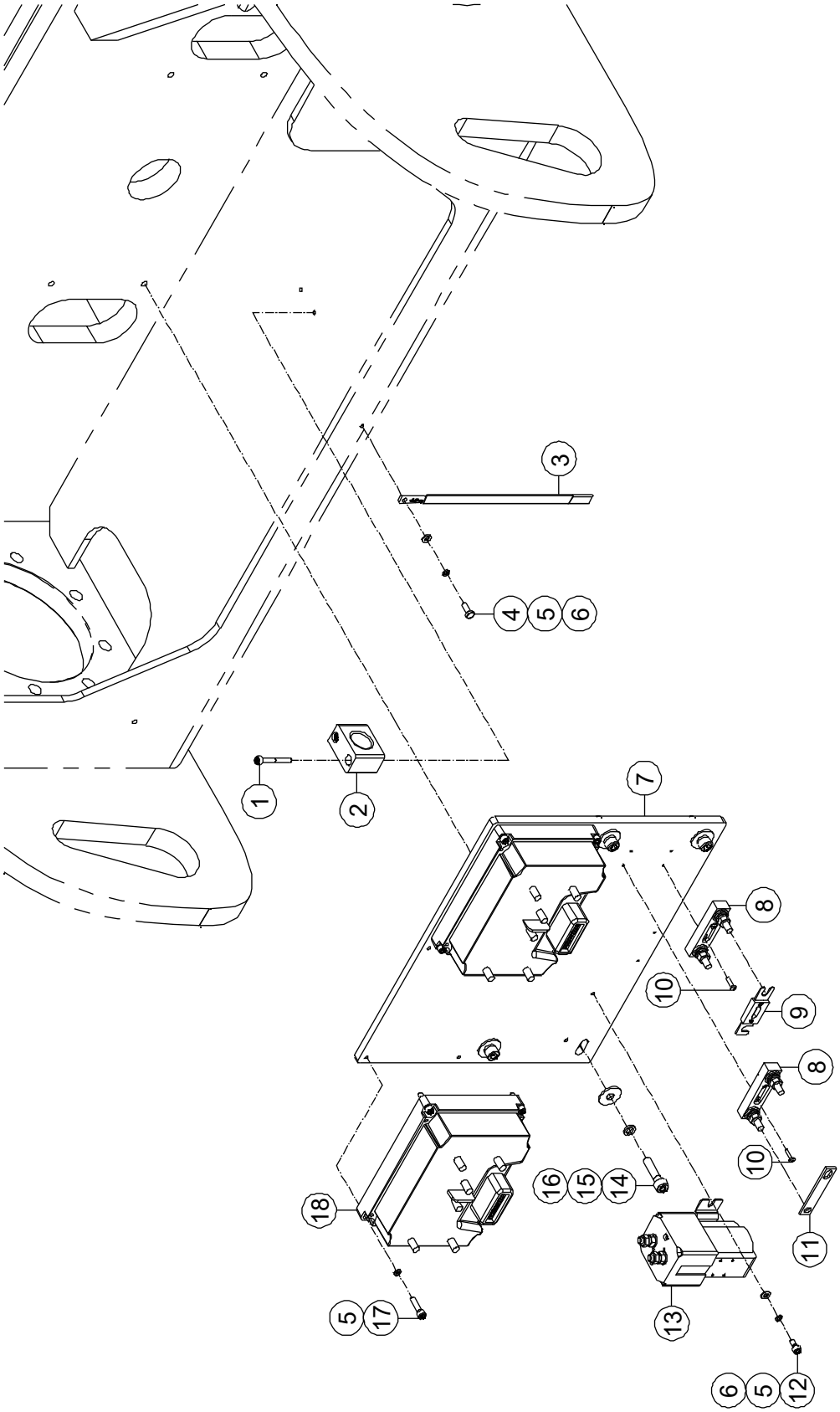

1-8 Rear Axle Accessory Installations

Item	Part Number	Description	Qty.	Remark
1	00001165	Screw GB/T 70 M6 × 45	2	
2	00007021	Clamp	1	
3	00005254	Ground Strap	1	
4	00000818	Bolt GB/T 5783 M6 × 16	1	
5	00000621	Spring Washer GB/T 93 6	11	
6	00000620	Flat Washer GB/T 97.1 6	3	
7	50000977	Bracket	1	
8	00000757	Seat, Fuse	2	
9	00000758	350A Fuse	1	
10	00001232	Screw GB/T 818 M4 × 16 - H	4	
11	50000099	Copper Bar 3	1	
12	00002029	Screw GB/T 70 M6 × 12	2	
13	00002221	Contactor	1	
14	00002050	Screw GB/T 70 M10 × 40	4	
15	00000679	Spring Washer GB/T 93 10	4	
16	00001028	Flat Washer GB/T 96.1 10	4	
17	00001034	Screw GB/T 70 M6 × 25	8	
18	00000641	Motor Controller	2	

1-9 Hydraulic Tank Assembly Installations

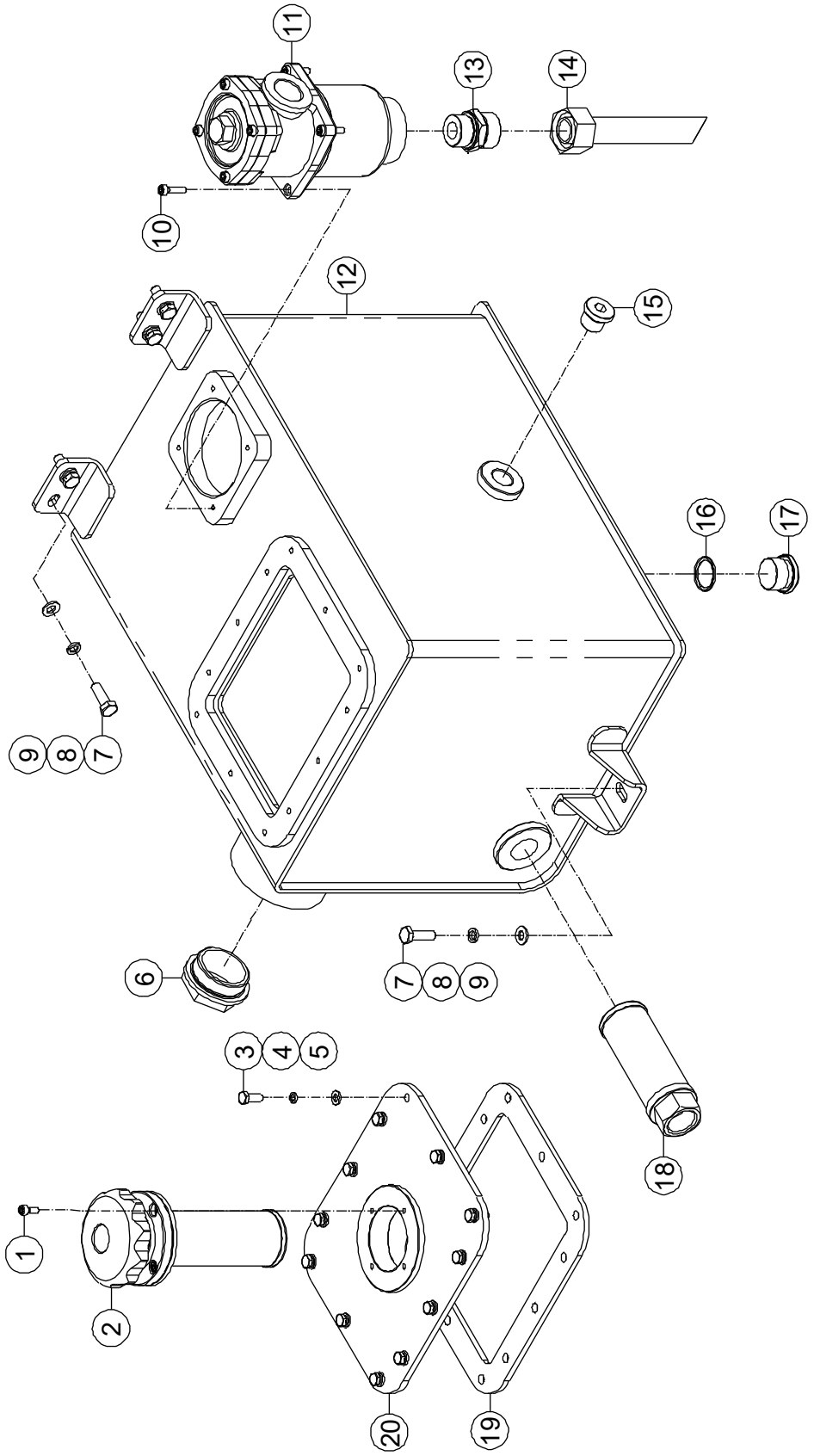

1-9 Hydraulic Tank Assembly Installations

Item	Part Number	Description	Qty.	Remark
1	00001252	Screw GB/T 70 M5 × 12	4	
2	00000520	Breather/Fill Cap	1	
3	00000818	Bolt GB/T 5783 M6 × 16	12	
4	00000621	Spring Washer GB/T 93 6	12	
5	00000620	Flat Washer GB/T 97.1 6	12	
6	90015911	Gauge, Sight	1	
7	00000993	Bolt GB/T 5783 M8 × 25	5	
8	00000609	Spring Washer GB/T 93 8	5	
9	00000608	Flat Washer GB/T 97.1 8	5	
10	00000817	Screw GB/T 70 M5 × 20	4	
11	00000516	Filter, Return Oil	1	
--	00003660	Strainer	1	
--	00003661	Seal Kit for 00000516 Filter	1	
12	50000962	Hydraulic Tank Weldment	1	
13	00002070	Fitting, Straight	1	
14	50005169	Hoses, steel	1	
15	00001076	Plug	1	
16	50000523	Washer	1	
17	50000197	G3/4 Plug, Magnetic	1	
18	00000518	Strainer, Suction	1	
19	50000961	Gasket	1	
20	50000966	Cover	1	

1-10 Lithium Battery Installations

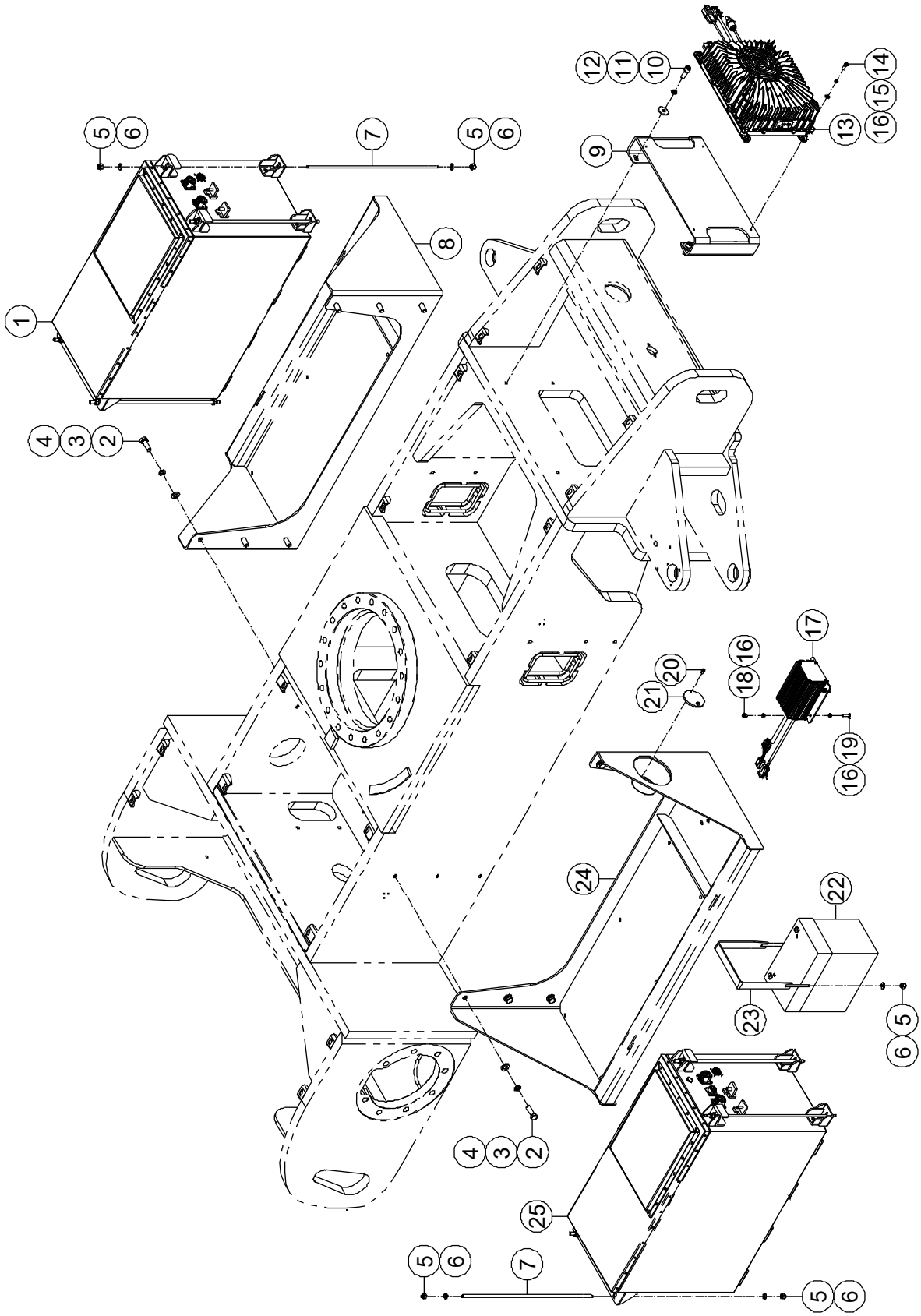

1-10 Lithium Battery Installations

Item	Part Number	Description	Qty.	Remark
1	00009832	Lithium Battery（B）	1	
2	00002046	Bolt GB/T 5783 M12 × 35	12	
3	00000815	Spring Washer GB/T 93 12	12	
4	00000814	Flat Washer GB/T 97.1 12	12	
5	00001163	Nut GB/T 6182 M8	18	
6	00000608	Flat Washer GB/T 97.1 8	18	
7	50000888	Rod, Hold-Down	8	
8	50000881	Box, Battery	1	
9	50007429	Bracket	1	
10	00001059	Screw GB/T 70 M10 × 30	4	
11	00000679	Spring Washer GB/T 93 10	4	
12	00001028	Flat Washer GB/T 96.1 10	4	
13	00009651	Charger	1	
14	00000876	Screw GB/T 70 M6 × 16	4	
15	00000621	Spring Washer GB/T 93 6	4	
16	00000620	Flat Washer GB/T 97.1 6	12	
17	00007381	Dc Power Supply	1	
18	00001033	Nut GB/T 6182 M6	4	
19	00000743	Bolt GB/T 5783 M6 × 20	4	
20	00002319	Screw GB/T 818 M5 × 10 - H	2	
21	10014940	Cover	1	
22	00004882	Battery	1	
23	50007427	Plate	1	
24	50007425	Box, Battery	1	
25	00009831	Lithium Battery（A）	1	

1-11 Steer Control Manifold Assembly Installations

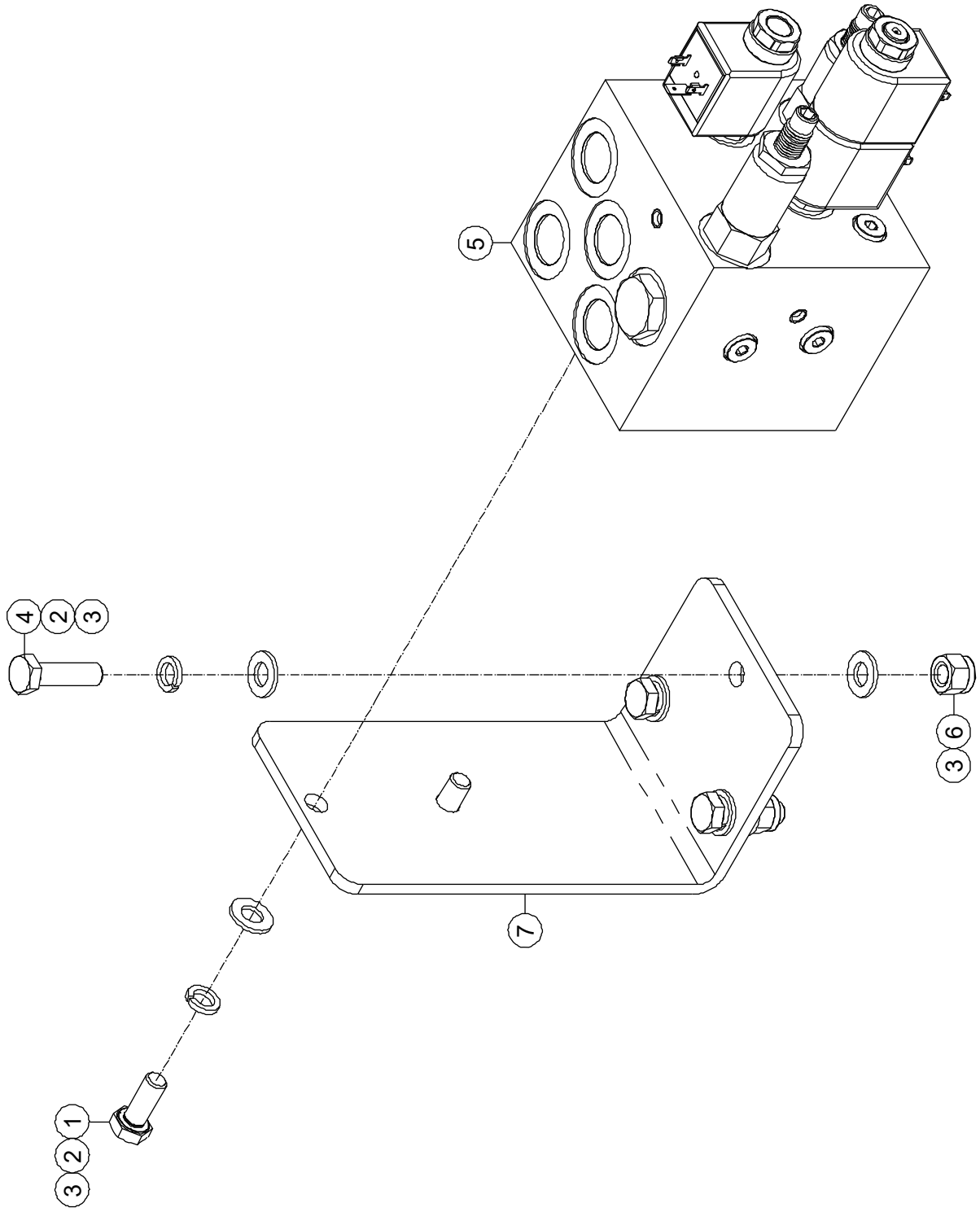

1-11 Steer Control Manifold Assembly Installations

Item	Part Number	Description	Qty.	Remark
1	00000678	Bolt GB/T 5783 M10 × 25	2	
2	00000679	Spring Washer GB/T 93 10	5	
3	00000615	Flat Washer GB/T 97.1 10	8	
4	00000684	Bolt GB/T 5783 M10 × 35	3	
5	00010024	Steer Control Manifold Assembly *(Refer to 1-12)*	1	
6	00000623	Nut GB/T 6182 M10	3	
7	50000968	Bracket	1	

1-12 Steer Control Manifold Assembly

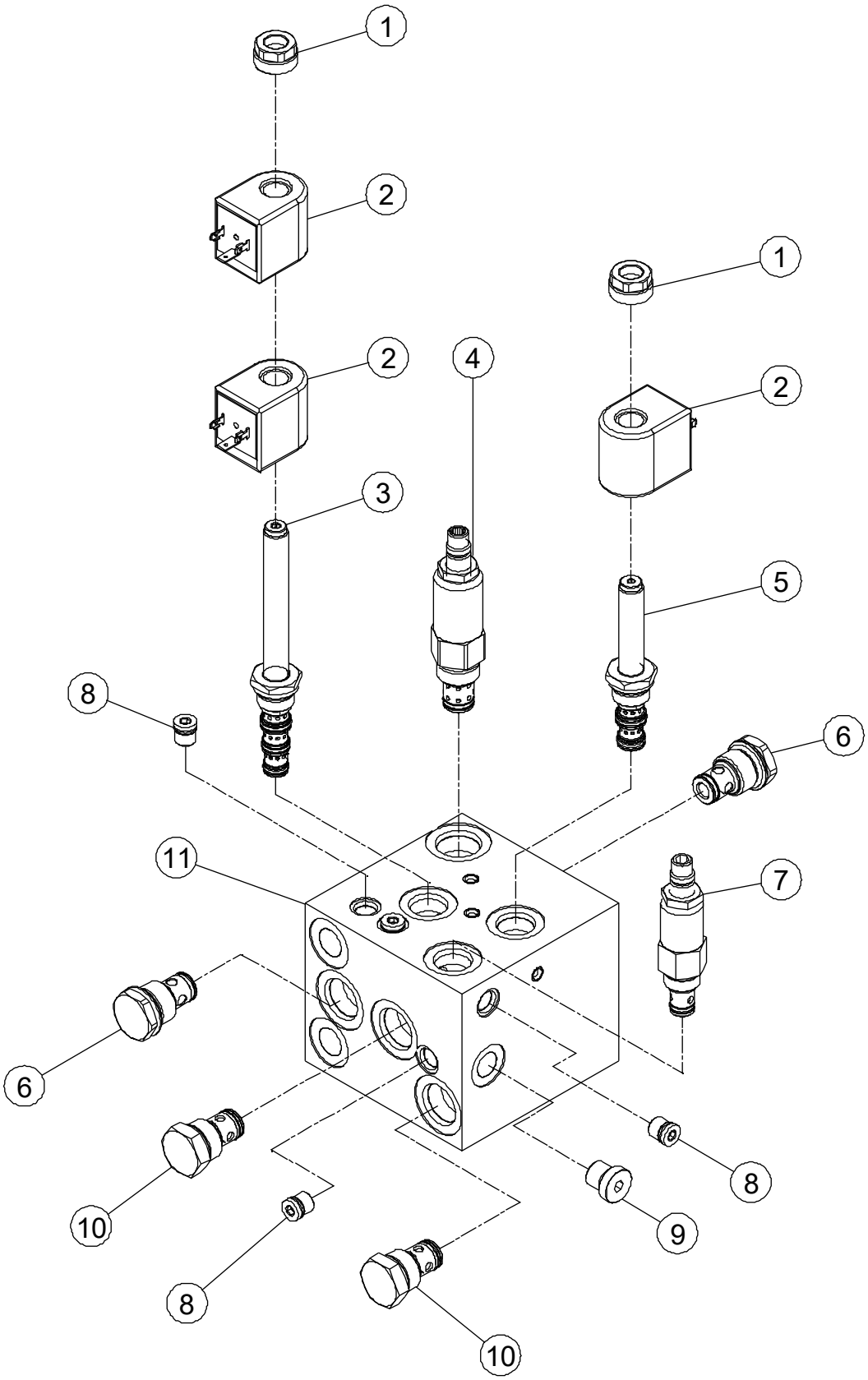

1-12 Steer Control Manifold Assembly

Item	Part Number	Description	Qty.	Remark
1	00003352	Nut	2	
2	00004322	Coil	3	
3	00003678	Cartridge Without Coil	1	
4	00003591	Cartridge, Relief Valve	1	
5	00003301	Cartridge Without Coil	1	
6	00004435	Cartridge, Check Valve	2	
7	00004437	Cartridge, Relief Valve	1	
8	00004342	Plug SAE4	6	
9	00001073	Plug VSTI14×1.5ED	1	
10	00003590	Cartridge, Check Valve	2	
11	00004436	Body	1	

1-13 Hood Assembly Installations

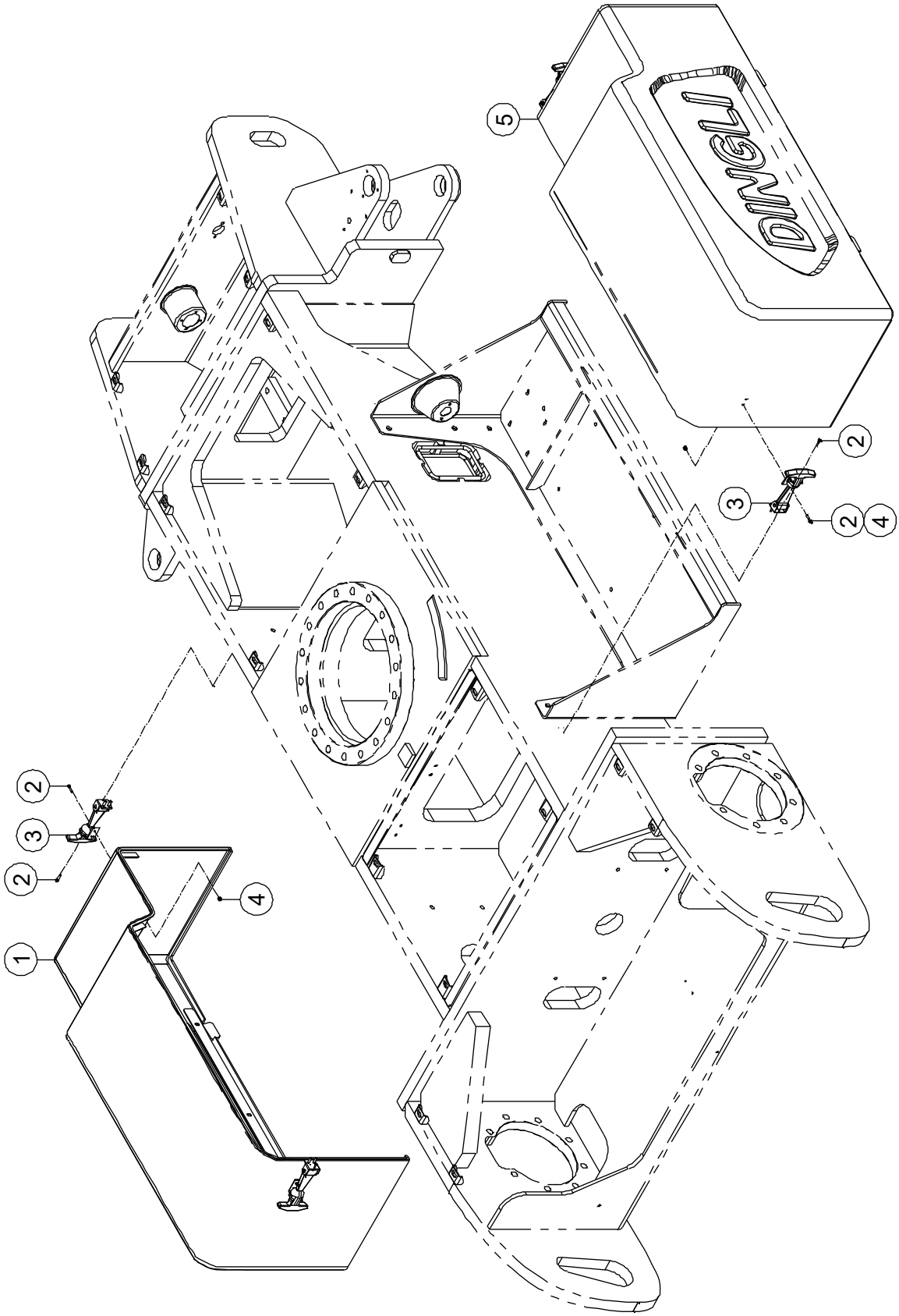

1-13 Hood Assembly Installations

Item	Part Number	Description	Qty.	Remark
1	50000874	Left Hood Assembly	1	
2	00000604	Screw GB/T 70.1 M4×16	20	
3	50000822	Latch	4	
4	00001236	Nut GB/T 889.1 M4	8	
5	50000875	Right Hood Assembly	1	

1-14 Chassis Components

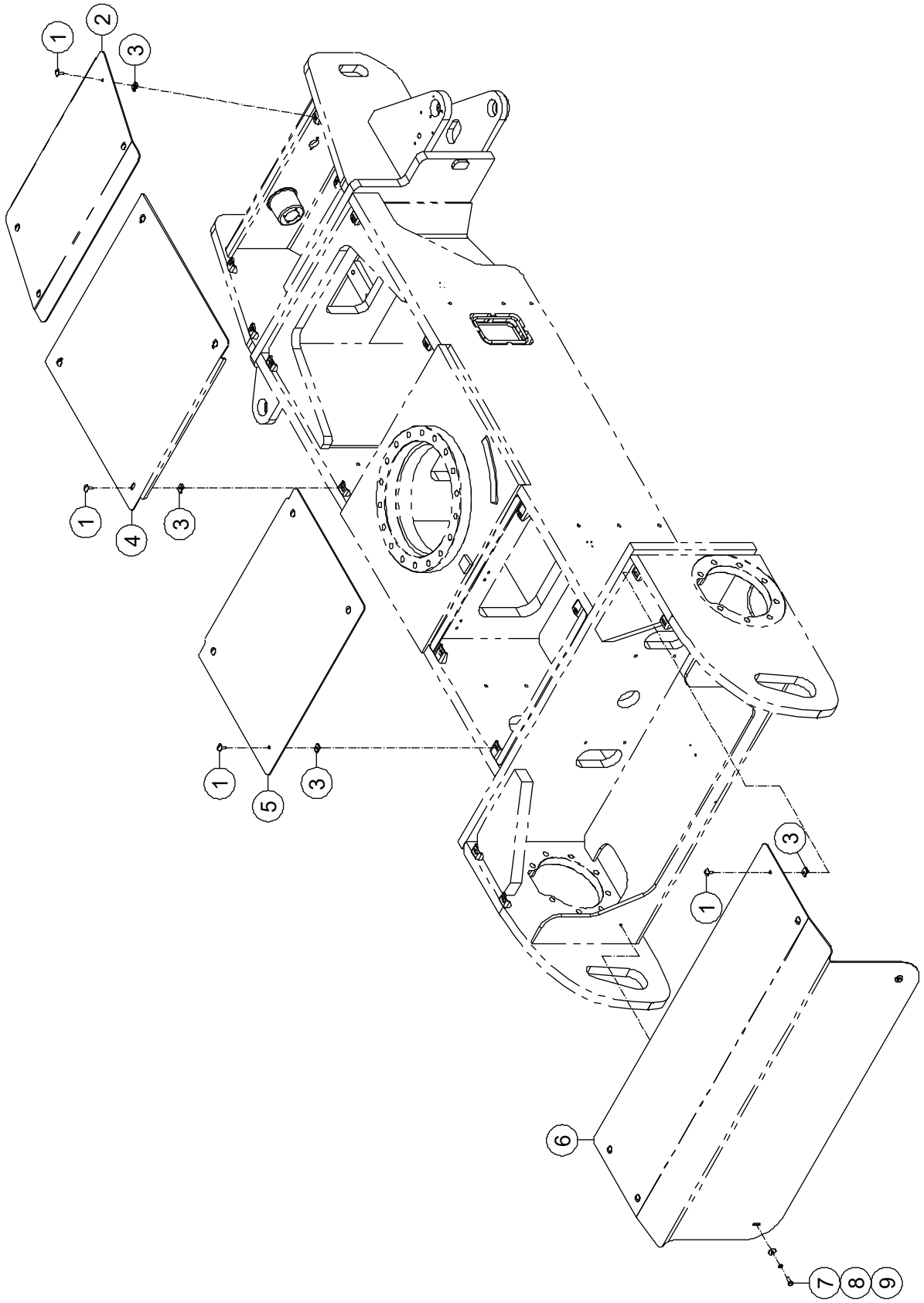

1-14 Chassis Components

Item	Part Number	Description	Qty.	Remark
1	10000063	Screw（L20）	16	
2	50000880	Cover	1	
3	50000112	Nut QC/T 885 M6	16	
4	50000879	Cover	1	
5	50000878	Cover	1	
6	50000877	Cover	1	
7	00000875	Bolt GB/T 5783 M8 × 20	2	
8	00000609	Spring Washer GB/T 93 8	2	
9	00002000	Flat Washer GB/T 96.1 8	2	

Section 2
Turntable

2-1 Turntable Accessories Installations 1

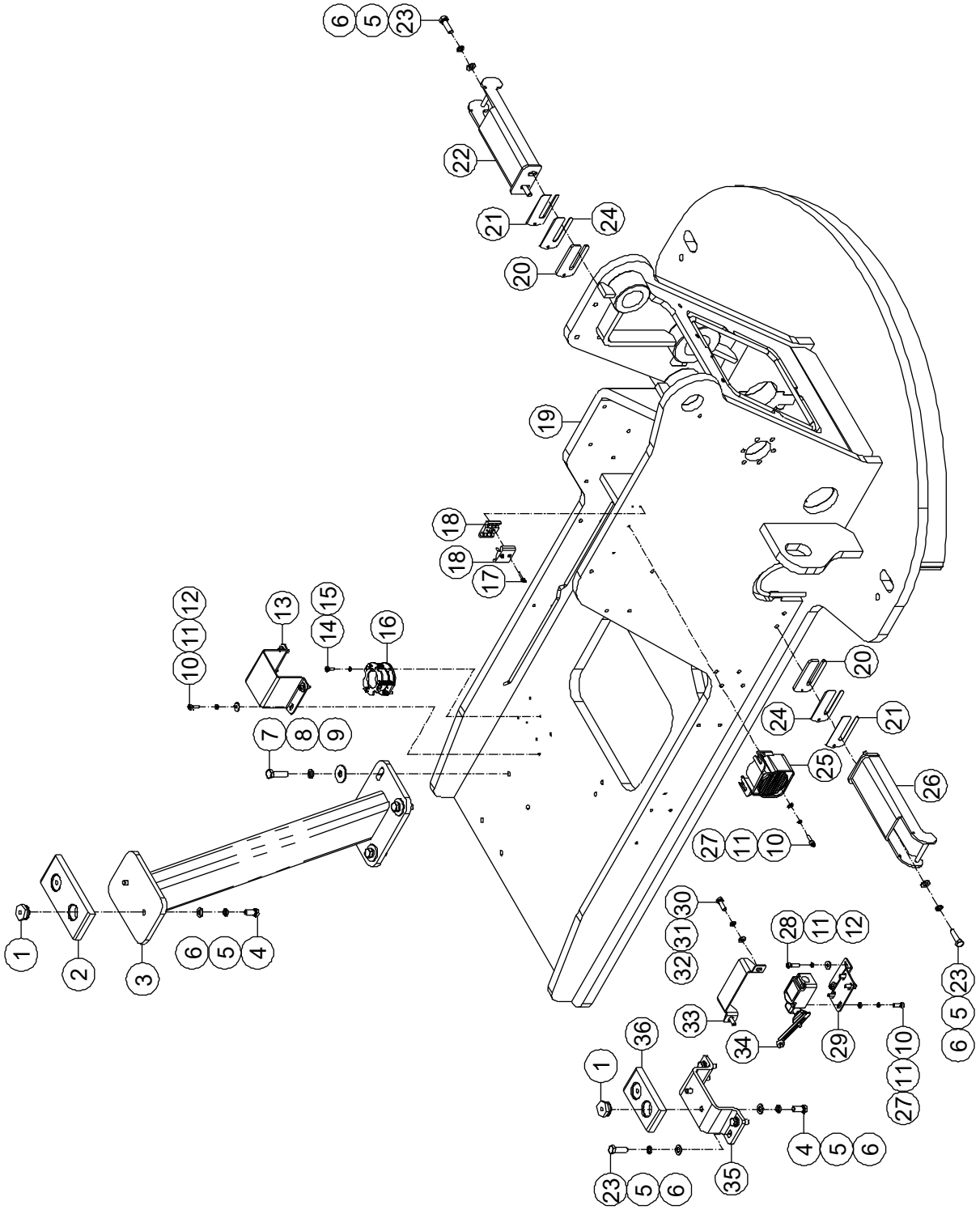

2-1 Turntable Accessories Installations 1

Item	Part Number	Description	Qty.	Remark
1	50000480	Insert	4	
2	50000983	Sliding Block	1	
3	50000840	Support	1	
4	00000678	Bolt GB/T 5783 M10 × 25	4	
5	00000679	Spring Washer GB/T 93 10	12	
6	00000615	Flat Washer GB/T 97.1 10	12	
7	00001055	Bolt GB/T 5783 M12 × 40	4	
8	00000815	Spring Washer GB/T 93 12	4	
9	00002601	Flat Washer GB/T 96.1 12	4	
10	00000774	Screw GB/T 70 M6 × 20	10	
11	00000621	Spring Washer GB/T 93 6	12	
12	00002583	Flat Washer GB/T 96.1 6	6	
13	50000103	Shield, Sensor	1	
14	00001246	Screw GB/T 70 M5 × 16	3	
15	00000606	Spring Washer GB/T 93 5	3	
16	00000642	Sensor, Tilt	1	
17	00002064	Screw GB/T 70 M4 × 20	2	
18	10000066	Clamp	2	
19	50000929	Turntable	1	BA16NE
	50001051	Turntable	1	BA18NE
20	50000830	Shim	2	
21	50000045	Shim	2	
22	50000828	Seat, Lock	1	
23	00000684	Bolt GB/T 5783 M10 × 35	8	
24	50000044	Shim	2	
25	00004438	Alarm	1	
26	50000831	Seat, Lock	1	
27	00000620	Flat Washer GB/T 97.1 6	6	
28	00001034	Screw GB/T 70 M6 × 25	2	

2-1 Turntable Accessories Installations 1 (Continued)

Item	Part Number	Description	Qty.	Remark
29	50000979	Plate, Bracket	1	
30	00000993	Bolt GB/T 5783 M8 × 25	2	
31	00000609	Spring Washer GB/T 93 8	2	
32	00000608	Flat Washer GB/T 97.1 8	2	
33	50004723	Cover	1	
34	00000749	Limit Switch	1	
35	50000823	Rest, Boom	1	
36	50000985	Sliding Block	1	

2-2 Turntable Accessories Installations 2

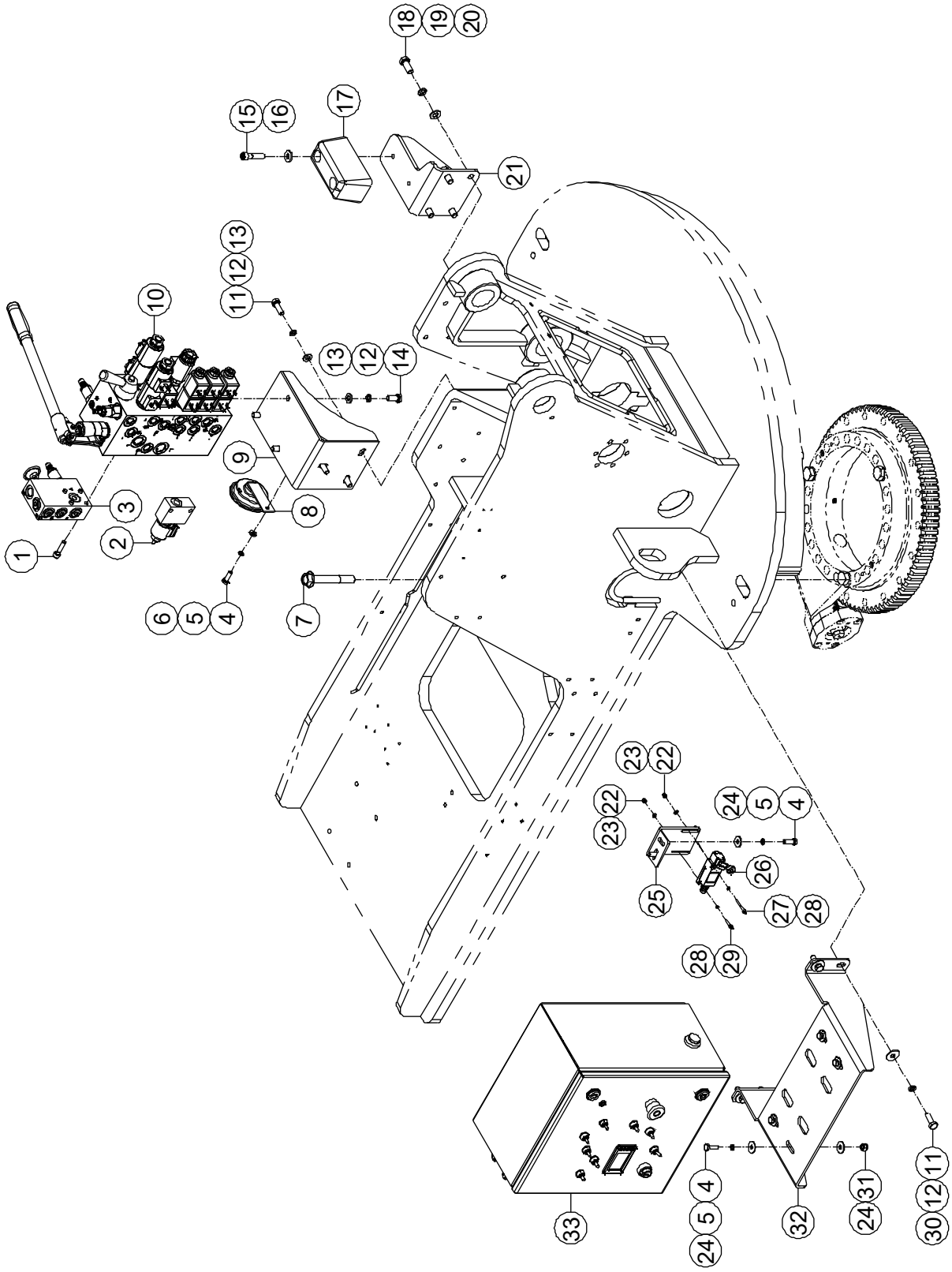

2-2 Turntable Accessories Installations 2

Item	Part Number	Description	Qty.	Remark
1	00002062	Screw GB/T 70 M8 × 35	4	
2	00010023	Releasing Manifold *(Refer to 2-3)*	1	
3	00001977	Synchronous Manifold Assembly *(Refer to 2-4)*	1	
4	00000993	Bolt GB/T 5783 M8 × 25	7	
5	00000609	Spring Washer GB/T 93 8	7	
6	00000608	Flat Washer GB/T 97.1 8	2	
7	00002055	Bolt GB/T 5789 M16 × 110	23	
8	00002212	Horn	1	
9	50000969	Plate, Bracket	1	
10	00010025	Functional Manifold Assembly *(Refer to 2-5)*	1	
11	00000683	Bolt GB/T 5783 M10 × 30	7	
12	00000679	Spring Washer GB/T 93 10	10	
13	00000615	Flat Washer GB/T 97.1 10	6	
14	00000678	Bolt GB/T 5783 M10 × 25	3	
15	00002058	Screw GB/T 70 M10 × 45	2	
16	92100049	Washer	2	
17	10000041	Plate, Rubber	1	
18	00002059	Bolt GB/T 5783 M12 × 30	4	
19	00000815	Spring Washer GB/T 93 12	4	
20	00000814	Flat Washer GB/T 97.1 12	4	
21	50000836	Boom Rest Weldment	1	
22	00001236	Nut GB/T 889.1 M4	4	
23	00000778	Flat Washer GB/T 97.1 4	4	
24	00002000	Flat Washer GB/T 96.1 8	10	
25	50000978	Bracket	1	
26	00000748	Switch, Limit	1	
27	00001235	Screw GB/T 70 M4 × 35	2	
28	00000779	Spring Washer GB/T 93 4	4	

2-2 Turntable Accessories Installations 2 (Continued)

Item	Part Number	Description	Qty.	Remark
29	00002064	Screw GB/T 70 M4 × 20	2	
30	00001028	Flat Washer GB/T 96.1 10	4	
31	00001163	Nut GB/T 6182 M8	5	
32	50000981	Plate, Bracket	1	
33		Ground Control Box Assembly *(Refer to 7-2)*	1	

2-3 Releasing Manifold

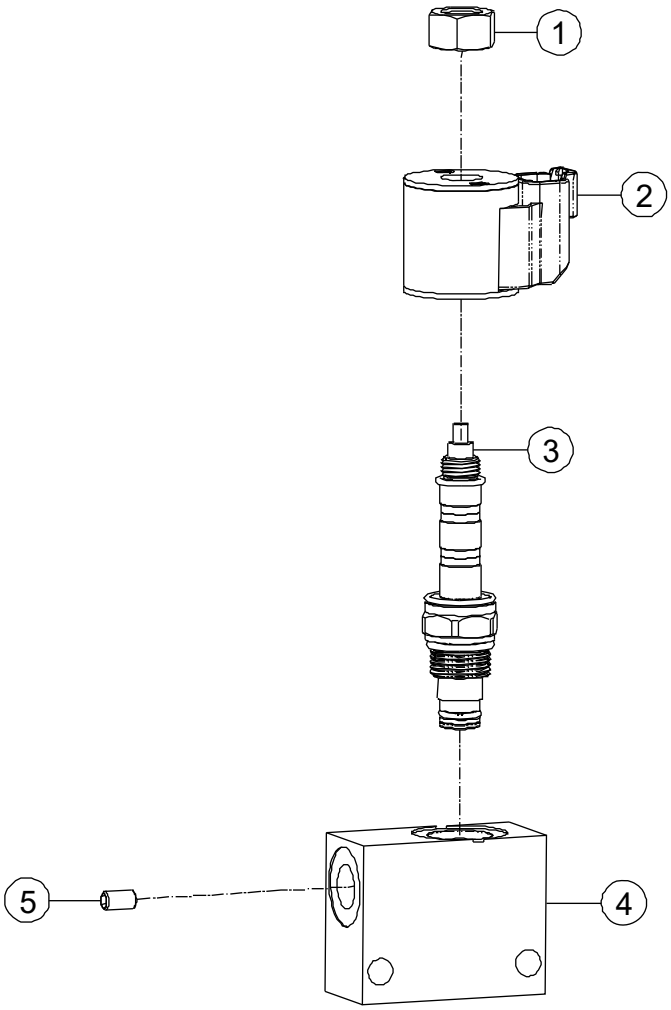

2-3 Releasing Manifold

Item	Part Number	Description	Qty.	Remark
1	00006765	Nut	1	
2	00004091	Coil	1	
3	00008083	Cartridge, solenoid	1	
4	00008081	Body	1	
5	00008086	Orifice	1	

2-4 Synchronous Manifold Assembly

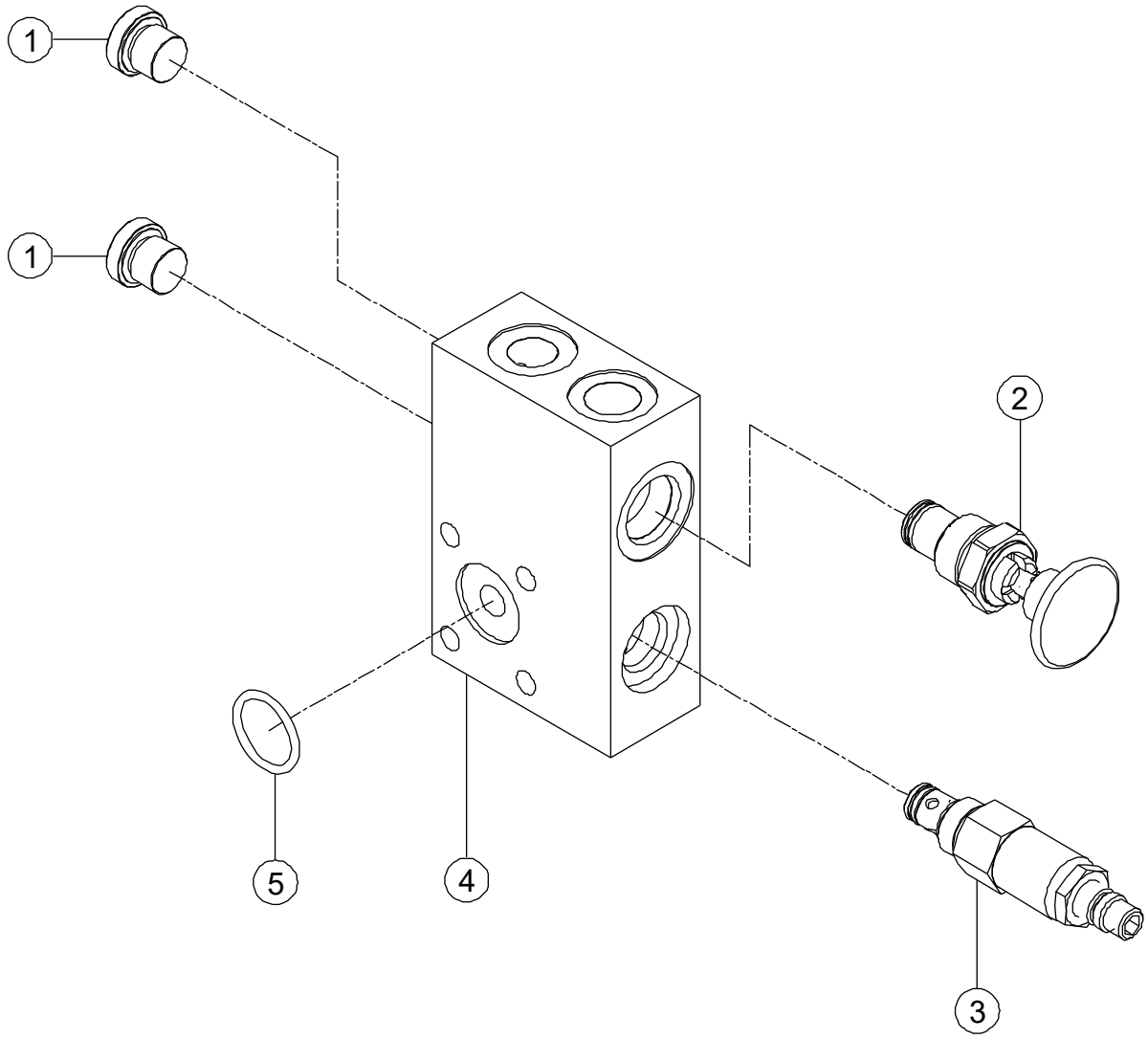

2-4 Synchronous Manifold Assembly

Item	Part Number	Description	Qty.	Remark
1	00001074	Plug	2	
2	00004448	Manual Valve	1	
3	00004449	Cartridge, Relief Valve	1	
4	00004447	Body	1	
5	00001714	O-Ring	1	

2-5 Functional Manifold Assembly

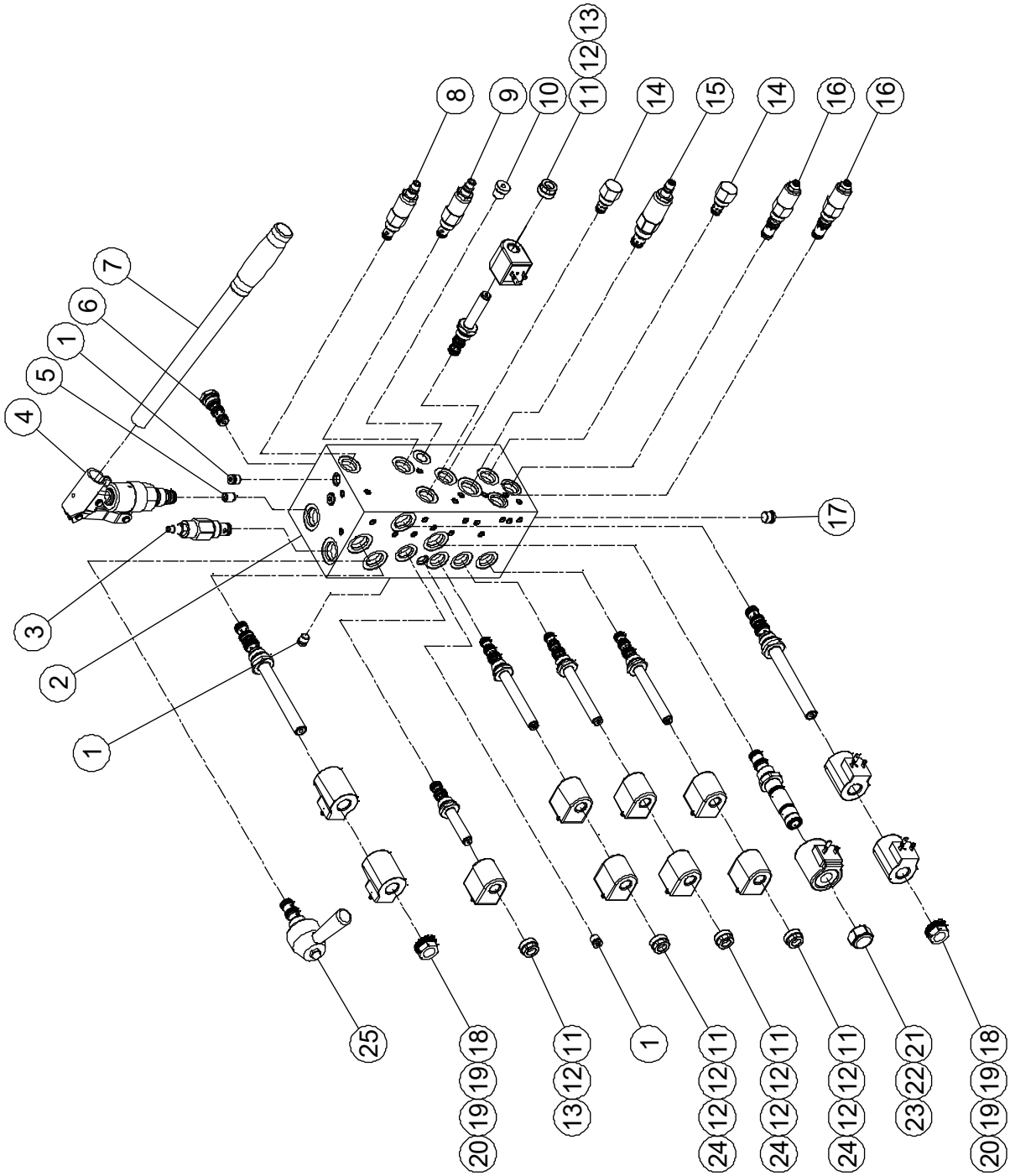

2-5 Functional Manifold Assembly

Item	Part Number	Description	Qty.	Remark
1	00004342	Plug	4	
2	00004453	Body	1	
3	00003681	Flow Control Valve	1	
4	00007613	Manual Pump	1	
5	00004460	Orifice Plug	1	
6	00004457	Shuttle Valve	1	
7	00004451	Handle	1	
8	00004459	Cartridge, Relief Valve	1	
9	00004437	Cartridge, Relief Valve	1	
10	00001073	Plug	1	
11	00003352	Nut	5	
12	00004322	Coil	8	
13	00003301	Cartridge Without Coil	2	
14	00004455	Flow Control Valve	2	
15	00004458	Cartridge, Relief Valve	1	
16	00003682	Cartridge, Valve (Counterbalance)	2	
17	00004343	Plug	1	
18	00003353	Nut	2	
19	00004323	Coil	4	
20	00004452	Cartridge Without Coil	2	
21	00003685	Nut	1	
22	00004002	Coil	1	
23	00003676	Proportional Valve	1	
24	00003678	Cartridge Without Coil	3	
25	00004454	Manual Valve	1	

2-6 Turntable Left Hood Bracket Installations

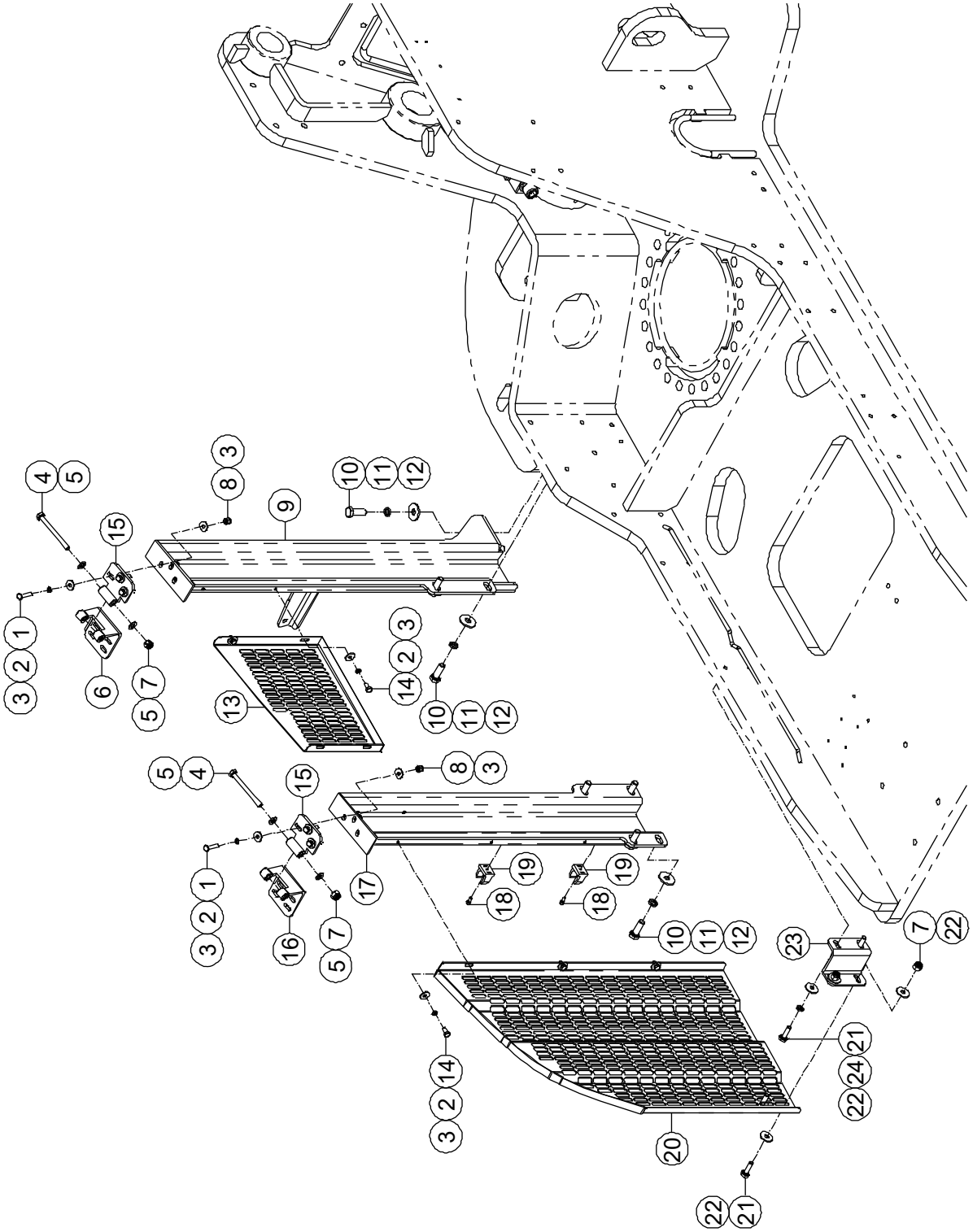

2-6 Turntable Left Hood Bracket Installations

Item	Part Number	Description	Qty.	Remark
1	00000619	Bolt GB/T 5783 M6 × 25	6	
2	00000621	Spring Washer GB/T 93 6	13	
3	00002583	Flat Washer GB/T 96.1 6	19	
4	00001026	Bolt GB/T 5782 M8 × 80	2	
5	00000608	Flat Washer GB/T 97.1 8	4	
6	50000872	Hinge 1	1	
7	00001163	Nut GB/T 6182 M8	4	
8	00001033	Nut GB/T 6182 M6	6	
9	50000845	Plate, Bracket	1	
10	00000683	Bolt GB/T 5783 M10 × 30	8	
11	00000679	Spring Washer GB/T 93 10	8	
12	00001028	Flat Washer GB/T 96.1 10	8	
13	50000851	Wallboard, Left	1	
14	00000745	Bolt GB/T 5783 M6 × 12	7	
15	50000996	Hinge 2	2	
16	50000870	Hinge 1	1	
17	50000847	Plate, Bracket	1	
18	00002002	Screw GB/T 70 M4 × 10	2	
19	00002068	Clamp	2	
20	50000849	Wallboard, Left	1	
21	00000993	Bolt GB/T 5783 M8 × 25	4	
22	00002000	Flat Washer GB/T 96.1 8	6	
23	50000850	Plate, Link	1	
24	00000609	Spring Washer GB/T 93 8	4	

2-7 Left Hood Assembly

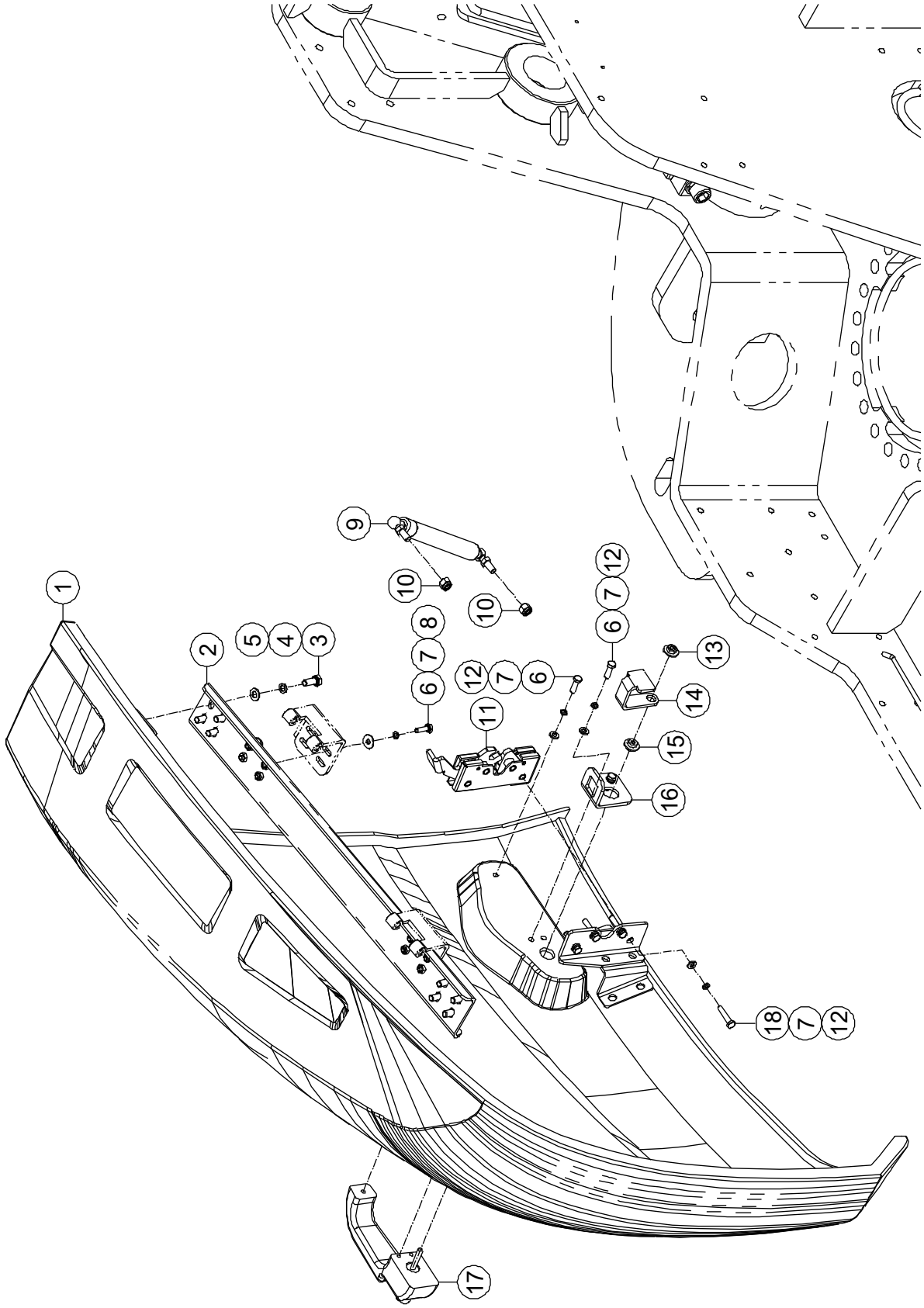

2-7 Left Hood Assembly

Item	Part Number	Description	Qty.	Remark
1	50000853	Left Hood	1	
2	50000854	Plate, Bracket	1	
3	00000875	Bolt GB/T 5783 M8 × 20	8	
4	00000609	Spring Washer GB/T 93 8	8	
5	00000608	Flat Washer GB/T 97.1 8	8	
6	00000743	Bolt GB/T 5783 M6 × 20	11	
7	00000621	Spring Washer GB/T 93 6	15	
8	00002583	Flat Washer GB/T 96.1 6	8	
9	50000827	Spring, Gas	1	
10	00001163	Nut GB/T 6182 M8	2	
11	10000481	Lock	1	
12	00000620	Flat Washer GB/T 97.1 6	7	
13	50000479	Nut	1	
14	50000043	Plate	1	
15	50000478	Pin	1	
16	50000856	Plate	1	
17	50000524	Doorknob	1	
18	00000775	Bolt GB/T 5783 M6 × 30	4	

2-8 Turntable Right Hood Bracket Installations

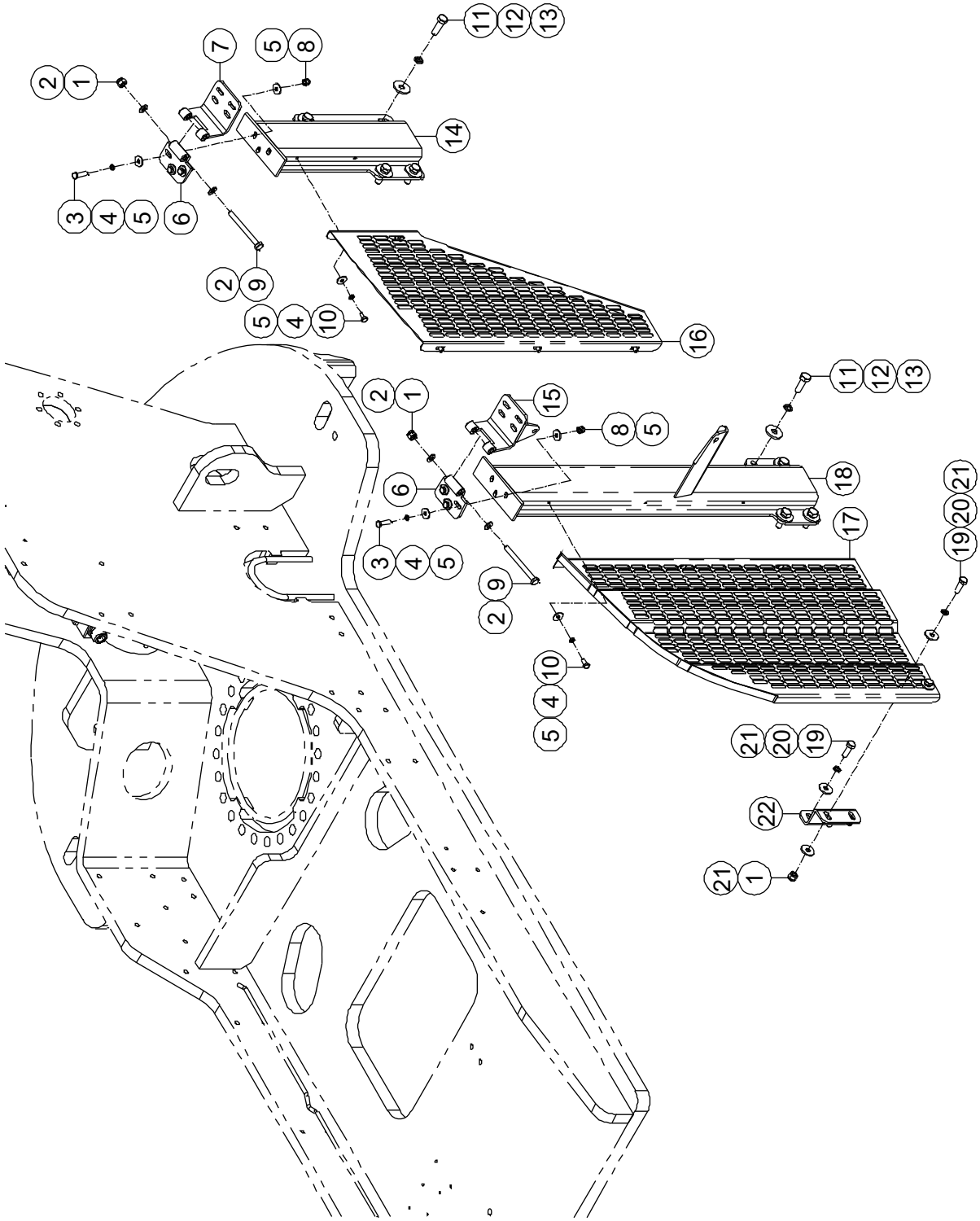

2-8 Turntable Right Hood Bracket Installations

Item	Part Number	Description	Qty.	Remark
1	00001163	Nut GB/T 6182 M8	4	
2	00000608	Flat Washer GB/T 97.1 8	4	
3	00000619	Bolt GB/T 5783 M6 × 25	6	
4	00000621	Spring Washer GB/T 93 6	14	
5	00002583	Flat Washer GB/T 96.1 6	20	
6	50000996	Hinge 2	2	
7	50000870	Hinge 1	1	
8	00001033	Nut GB/T 6182 M6	6	
9	00001026	Bolt GB/T 5782 M8 × 80	2	
10	00000745	Bolt GB/T 5783 M6 × 12	8	
11	00000683	Bolt GB/T 5783 M10 × 30	8	
12	00000679	Spring Washer GB/T 93 10	8	
13	00001028	Flat Washer GB/T 96.1 10	8	
14	50000857	Plate, Bracket	1	
15	50000872	Hinge 1	1	
16	50000864	Wallboard, Right	1	
17	50000861	Wallboard, Right	1	
18	50000859	Plate, Bracket	1	
19	00000993	Bolt GB/T 5783 M8 × 25	4	
20	00000609	Spring Washer GB/T 93 8	4	
21	00002000	Flat Washer GB/T 96.1 8	6	
22	50000863	Plate, Link	1	

2-9 Right Hood Assembly

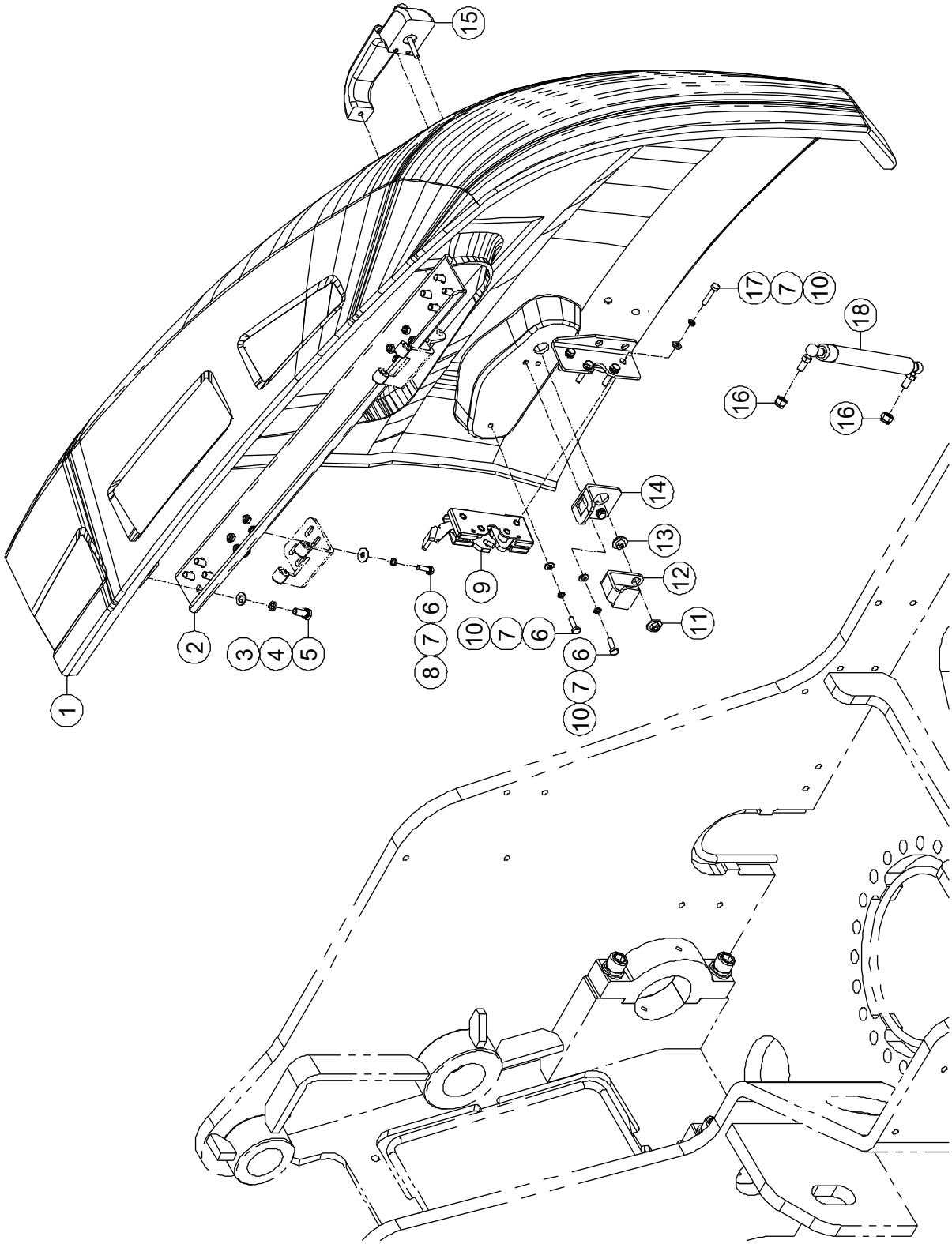

2-9 Right Hood Assembly

Item	Part Number	Description	Qty.	Remark
1	50000866	Right Hood	1	
2	50000867	Plate, Bracket	1	
3	00000608	Flat Washer GB/T 97.1 8	8	
4	00000609	Spring Washer GB/T 93 8	8	
5	00000875	Bolt GB/T 5783 M8 × 20	8	
6	00000743	Bolt GB/T 5783 M6 × 20	11	
7	00000621	Spring Washer GB/T 93 6	15	
8	00002583	Flat Washer GB/T 96.1 6	8	
9	10000480	Lock	1	
10	00000620	Flat Washer GB/T 97.1 6	7	
11	50000479	Nut	1	
12	50000043	Plate	1	
13	50000478	Pin	1	
14	50000042	Plate	1	
15	50000524	Doorknob	1	
16	00001163	Nut GB/T 6182 M8	2	
17	00000775	Bolt GB/T 5783 M6 × 30	4	
18	50000827	Spring, Gas	1	

2-10 Counterweight Installations

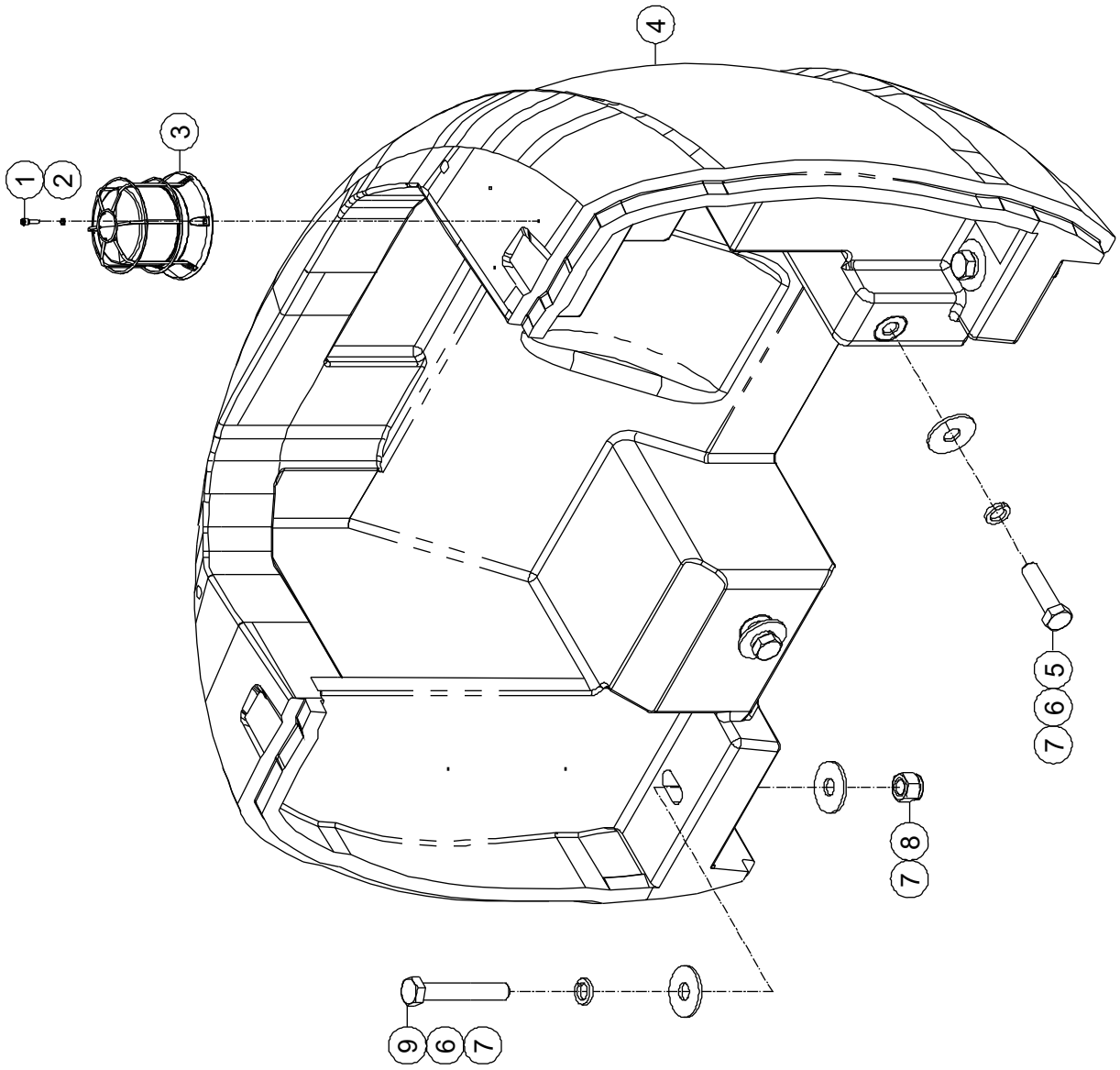

2-10 Counterweight Installations

Item	Part Number	Description	Qty.	Remark
1	00000774	Screw GB/T 70 M6 × 20	3	
2	00000621	Spring Washer GB/T 93 6	3	
3	00004757	Flashing Beacon	1	
4	50000833	Counterweight	1	
5	00002061	Bolt GB/T 5783 M24 × 90	2	
6	00001153	Spring Washer GB/T 93 24	4	
7	00001152	Flat Washer GB/T 96.1 24	6	
8	00005262	Nut GB/T 6182 M24	2	
9	00002060	Bolt GB/T 5782 M24 × 150	2	

Section 3
Boom

3-1 Crank Arm 1 Installations

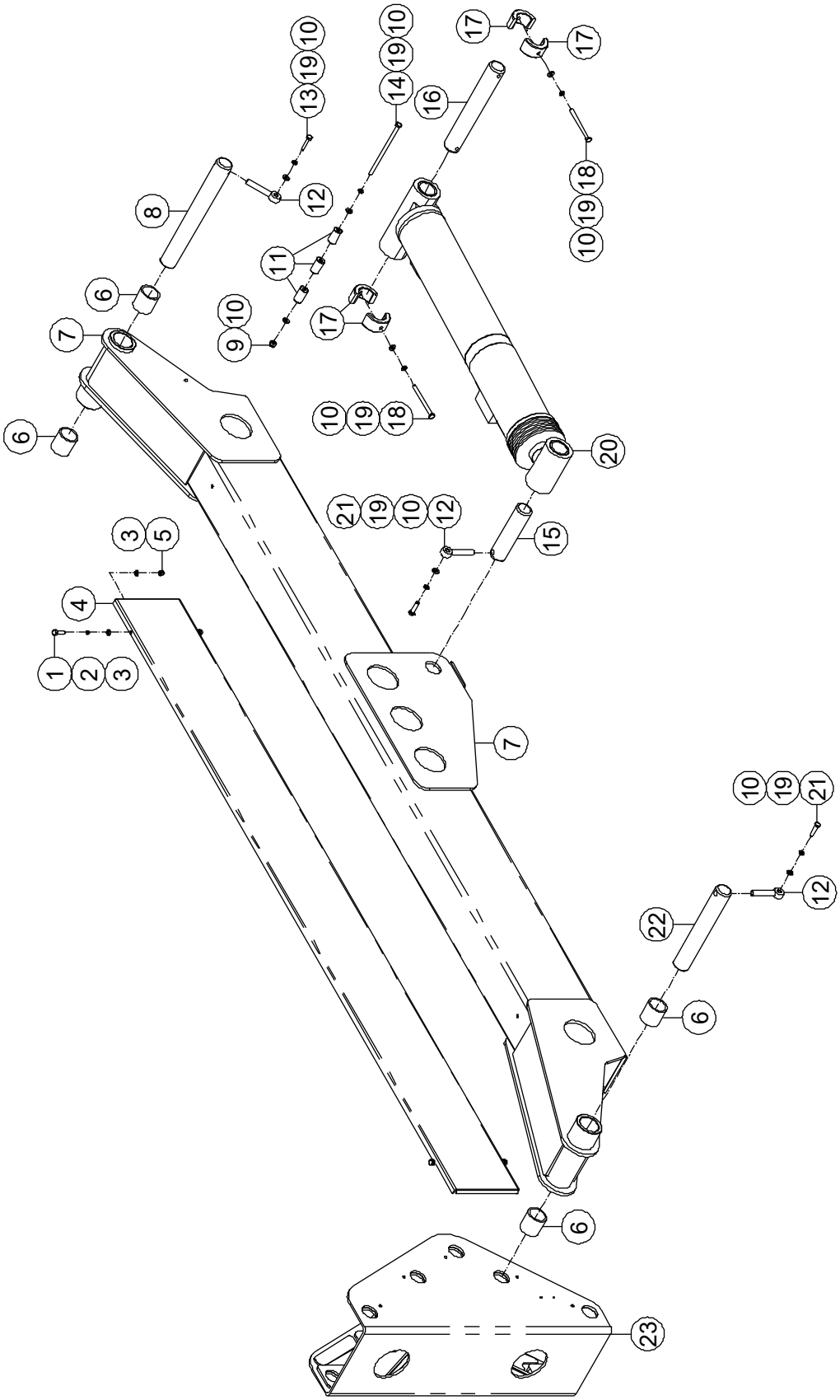

3-1 Crank Arm 1 Installations

Item	Part Number	Description	Qty.	Remark
1	00000683	Bolt GB/T 5783 M10 × 30	4	
2	00000609	Spring Washer GB/T 93 8	4	
3	00000608	Flat Washer GB/T 97.1 8	8	
4	50000732	Board, Vitta	1	BA16NE
	50001056	Board, Vitta	1	BA18NE
5	00001163	Nut GB/T 6182 M8	4	
6	00000428	8813-506060 Sleeve Bearing	4	
7	50000735	Crank Arm 1	1	BA16NE
	50001057	Crank Arm 1	1	BA18NE
8	00000137	895-50398 Pin, Pivot	1	
9	00000623	Nut GB/T 6182 M10	1	
10	00000615	Flat Washer GB/T 97.1 10	7	
11	50000709	Wheel, Nylon	3	
12	00003089	8902-16095B Pin, Lock	3	
13	00002411	Bolt GB/T 5783 M10 × 45	1	
14	00002033	Bolt GB/T 5782 M10 × 200	1	
15	00000126	895-50181 Pin, Pivot	1	
16	00000052	897-50300 Pin, Pivot	1	
17	50000826	Pin, Sleeve	4	
18	00002057	Bolt GB/T 5783 M10 × 120	2	
19	00000679	Spring Washer GB/T 93 10	6	
20		Lower Lifting Cylinder Assembly *(Refer to 5-2)*	1	
21	00001041	Bolt GB/T 5783 M10 × 40	2	
22	00000131	895-50301 Pin, Pivot	1	
23	50000733	Cage, Connection	1	

3-2 Rod, Connection 1 Installations

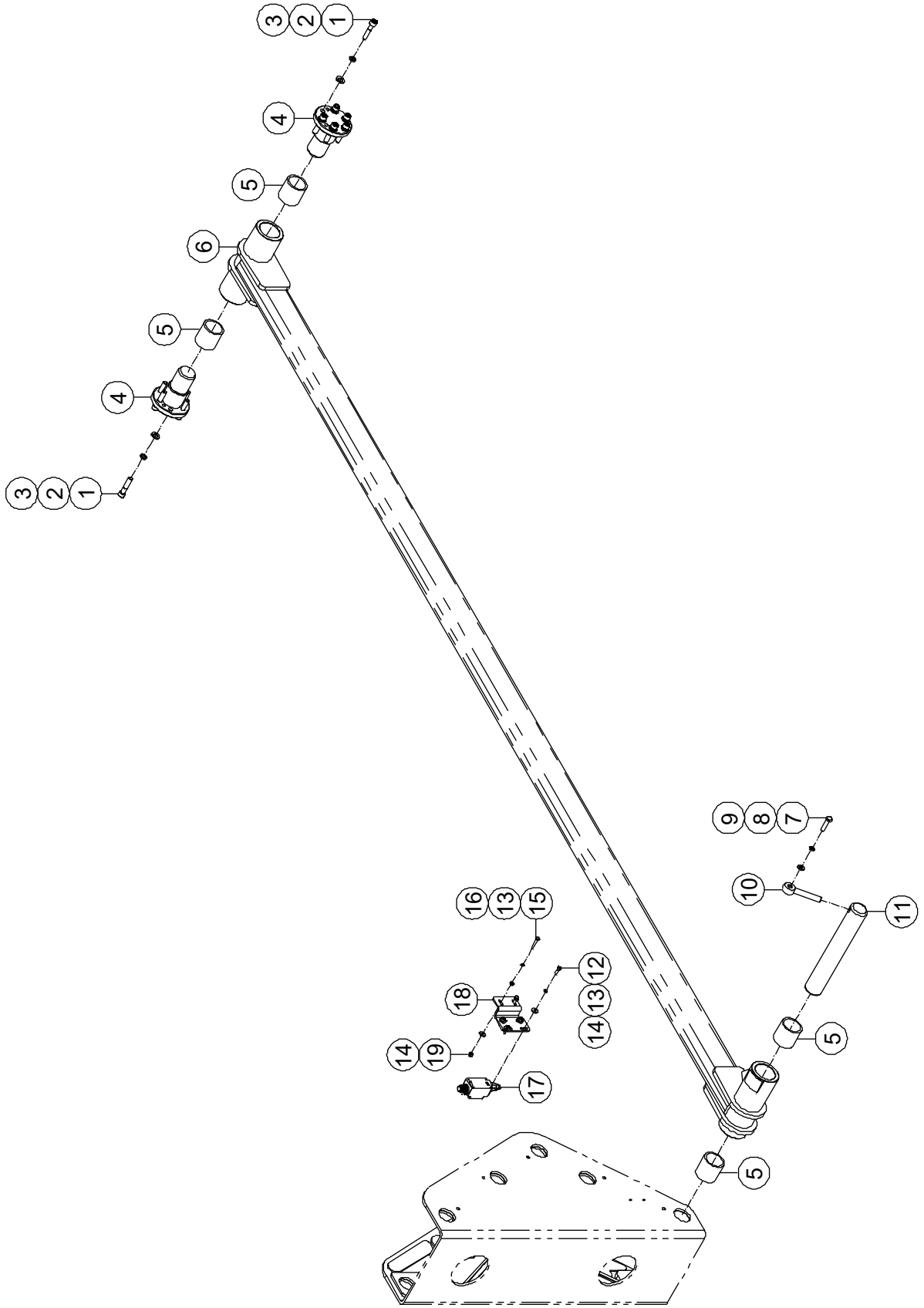

3-2 Rod, Connection 1 Installations

Item	Part Number	Description	Qty.	Remark
1	00001852	Screw GB/T 70 M12 × 55	12	
2	00000815	Spring Washer GB/T 93 12	12	
3	00000814	Flat Washer GB/T 97.1 12	12	
4	50000825	Pin, Pivot	2	
5	00000428	8813-506060 Sleeve Bearing	4	
6	50000738	Rod, Connection	1	BA16NE
	50001059	Rod, Connection	1	BA18NE
7	00001041	Bolt GB/T 5783 M10 × 40	1	
8	00000679	Spring Washer GB/T 93 10	1	
9	00000615	Flat Washer GB/T 97.1 10	1	
10	00003089	8902-16095B Pin, Lock	1	
11	00000131	895-50301 Pin, Pivot	1	
12	00000774	Screw GB/T 70 M6 × 20	4	
13	00000621	Spring Washer GB/T 93 6	6	
14	00002583	Flat Washer GB/T 96.1 6	6	
15	00002895	Bolt GB/T 5783 M6 × 35	2	
16	00000620	Flat Washer GB/T 97.1 6	2	
17	00000750	Switch, Limit	1	
18	50000294	Plate, Bracket	1	
19	00001033	Nut GB/T 6182 M6	2	

3-3 Crank Arm 2 Installations

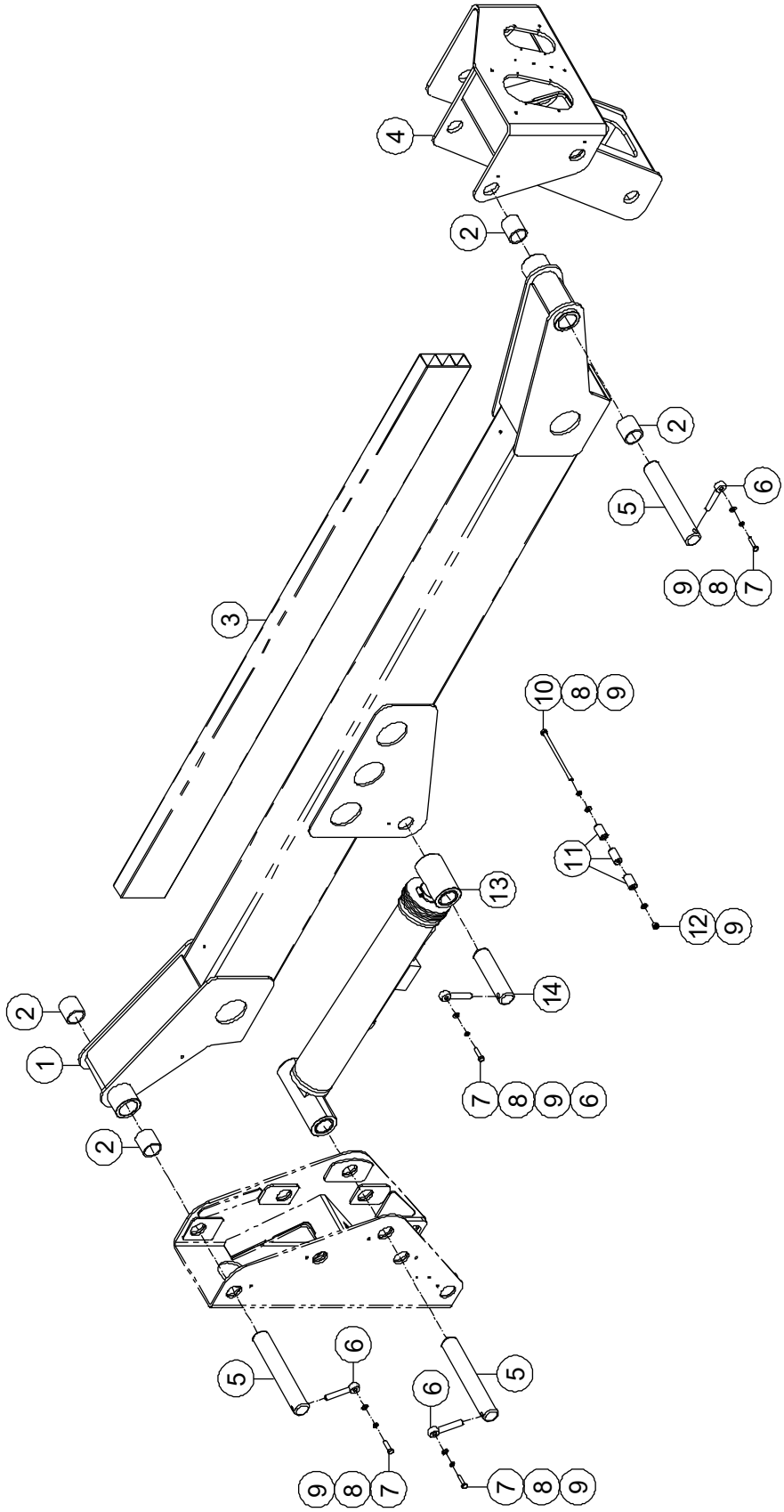

3-3 Crank Arm 2 Installations

Item	Part Number	Description	Qty.	Remark
1	50000741	Crank Arm 2	1	BA16NE
	50001061	Crank Arm 2	1	BA18NE
2	00000428	8813-506060 Sleeve Bearing	4	
3	50000744	Sleeve, Vitta	1	BA16NE
	50001062	Sleeve, Vitta	1	BA18NE
4	50000752	Cage, Connection	1	
5	00000131	895-50301 Pin, Pivot	3	
6	00003089	8902-16095B Pin, Lock	4	
7	00001041	Bolt GB/T 5783 M10 × 40	4	
8	00000679	Spring Washer GB/T 93 10	5	
9	00000615	Flat Washer GB/T 97.1 10	6	
10	00002033	Bolt GB/T 5782 M10 × 200	1	
11	50000709	Wheel, Nylon	3	
12	00000623	Nut GB/T 6182 M10	1	
13		Mid Lifting Cylinder Assembly *(Refer to 5-3)*	1	
14	00000126	895-50181 Pin, Pivot	1	

3-4 Rod, Connection 2 Installations

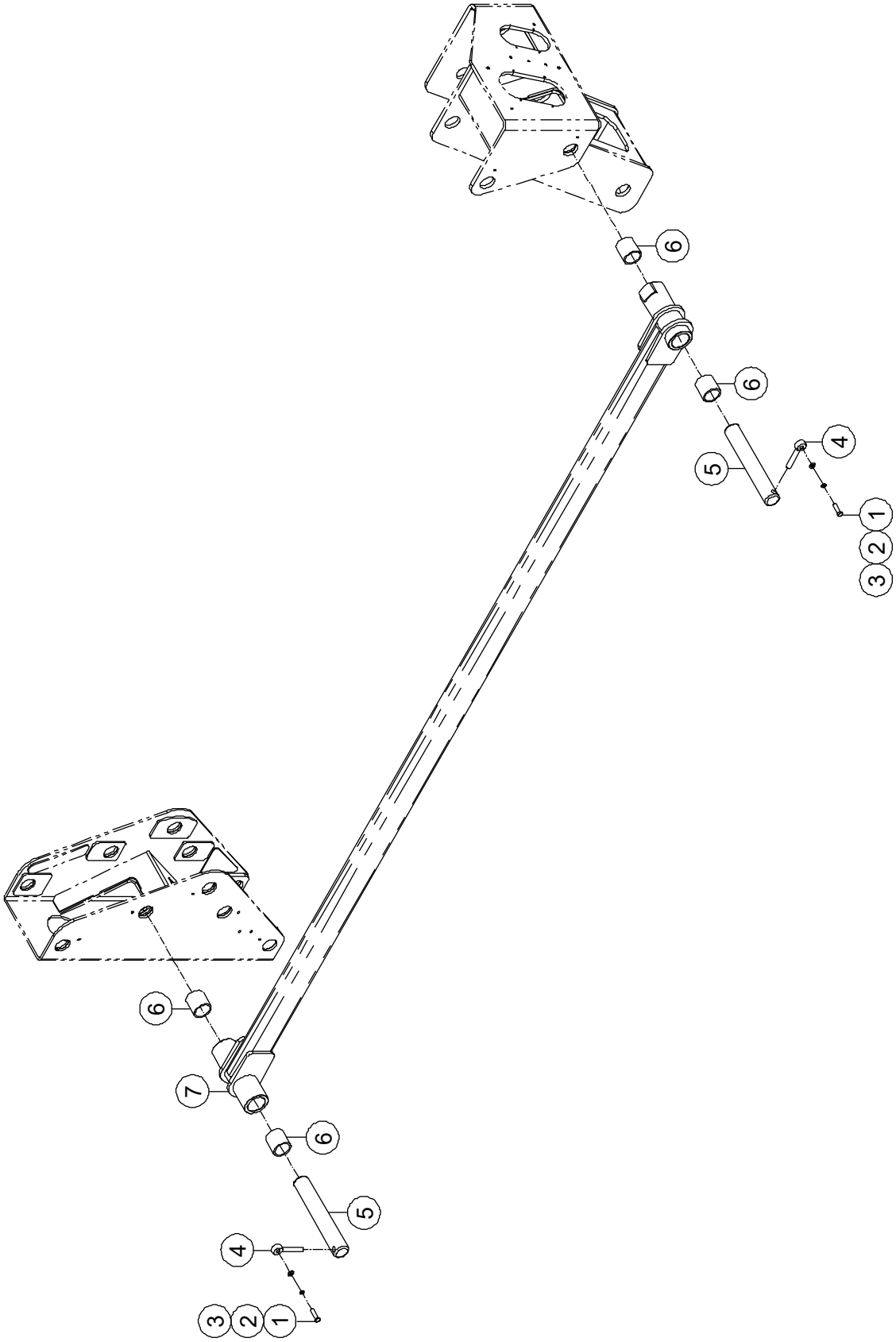

3-4 Rod, Connection 2 Installations

Item	Part Number	Description	Qty.	Remark
1	00001041	Bolt GB/T 5783 M10 × 40	2	
2	00000679	Spring Washer GB/T 93 10	2	
3	00000615	Flat Washer GB/T 97.1 10	2	
4	00003089	8902-16095B Pin, Lock	2	
5	00000131	895-50301 Pin, Pivot	2	
6	00000428	8813-506060 Sleeve Bearing	4	
7	50000738	Rod, Connection	1	BA16NE
	50001059	Rod, Connection	1	BA18NE

3-5 Cage, Connection Accessories Installations

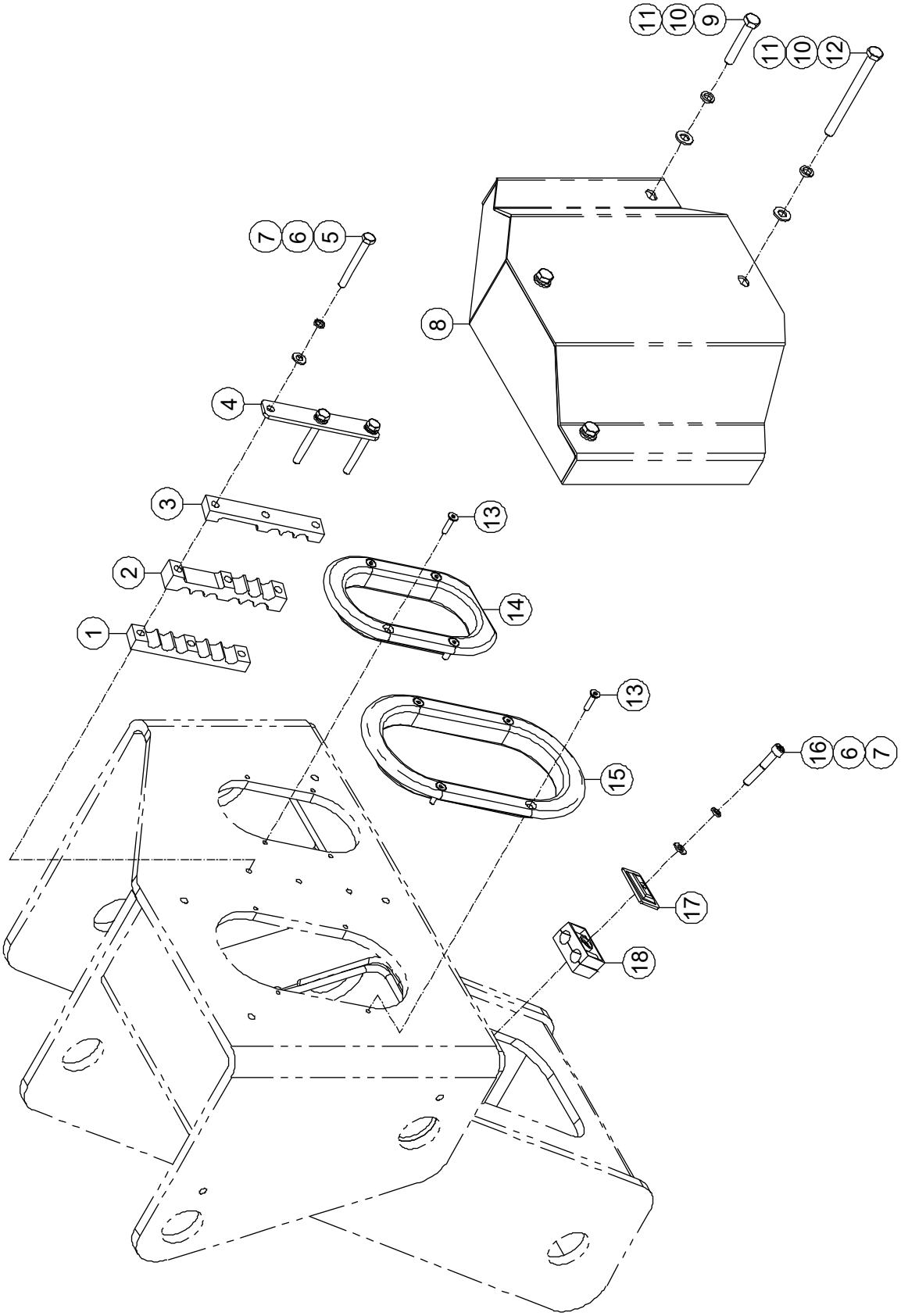

3-5 Cage, Connection Accessories Installations

Item	Part Number	Description	Qty.	Remark
1	50005776	Clamp 1	1	
2	50005775	Clamp 2	1	
3	50005777	Clamp 3	1	
4	50005778	Plate	1	
5	00001860	Bolt GB/T 5782 M8 × 70	3	
6	00000609	Spring Washer GB/T 93 8	4	
7	00000608	Flat Washer GB/T 97.1 8	4	
8	50000784	Cover	1	
9	00001984	Bolt GB/T 5782 M10 × 60	2	
10	00000679	Spring Washer GB/T 93 10	4	
11	00000615	Flat Washer GB/T 97.1 10	4	
12	00004603	Bolt GB/T 5782 M10 × 120	2	
13	00000832	Screw GB/T 70.3 M6×25	8	
14	50005774	Guard	1	
15	50005773	Guard	1	
16	00002558	Screw GB/T 70 M8 × 50	1	
17	90001243	Plate	1	
18	00000539	Clamp	1	

3-6 Telescopic Boom

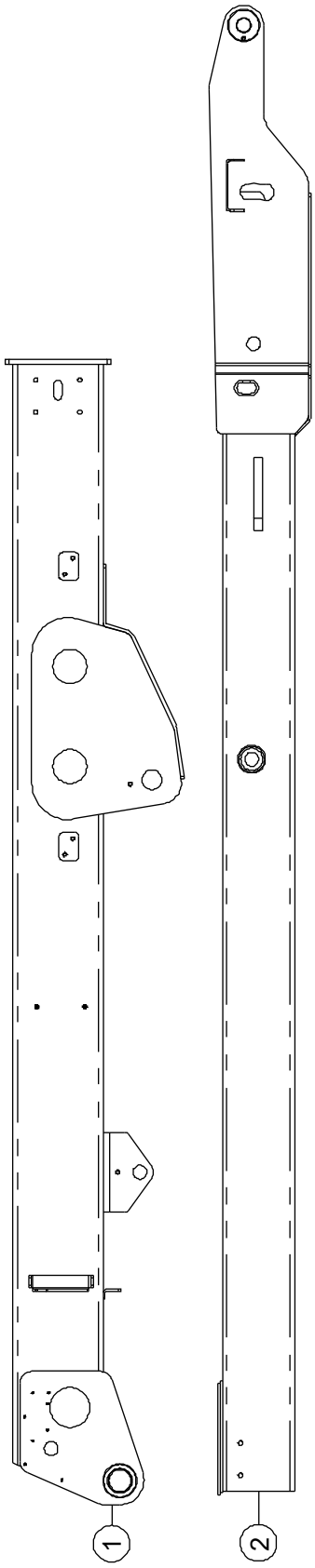

3-6 Telescopic Boom

Item	Part Number	Description	Qty.	Remark
1	50000764	Base Boom	1	BA16NE
	50001068	Base Boom	1	BA18NE
2	50000775	Second Boom	1	BA16NE
	50001070	Second Boom	1	BA18NE

3-7 Base Boom Sliding Block Installations

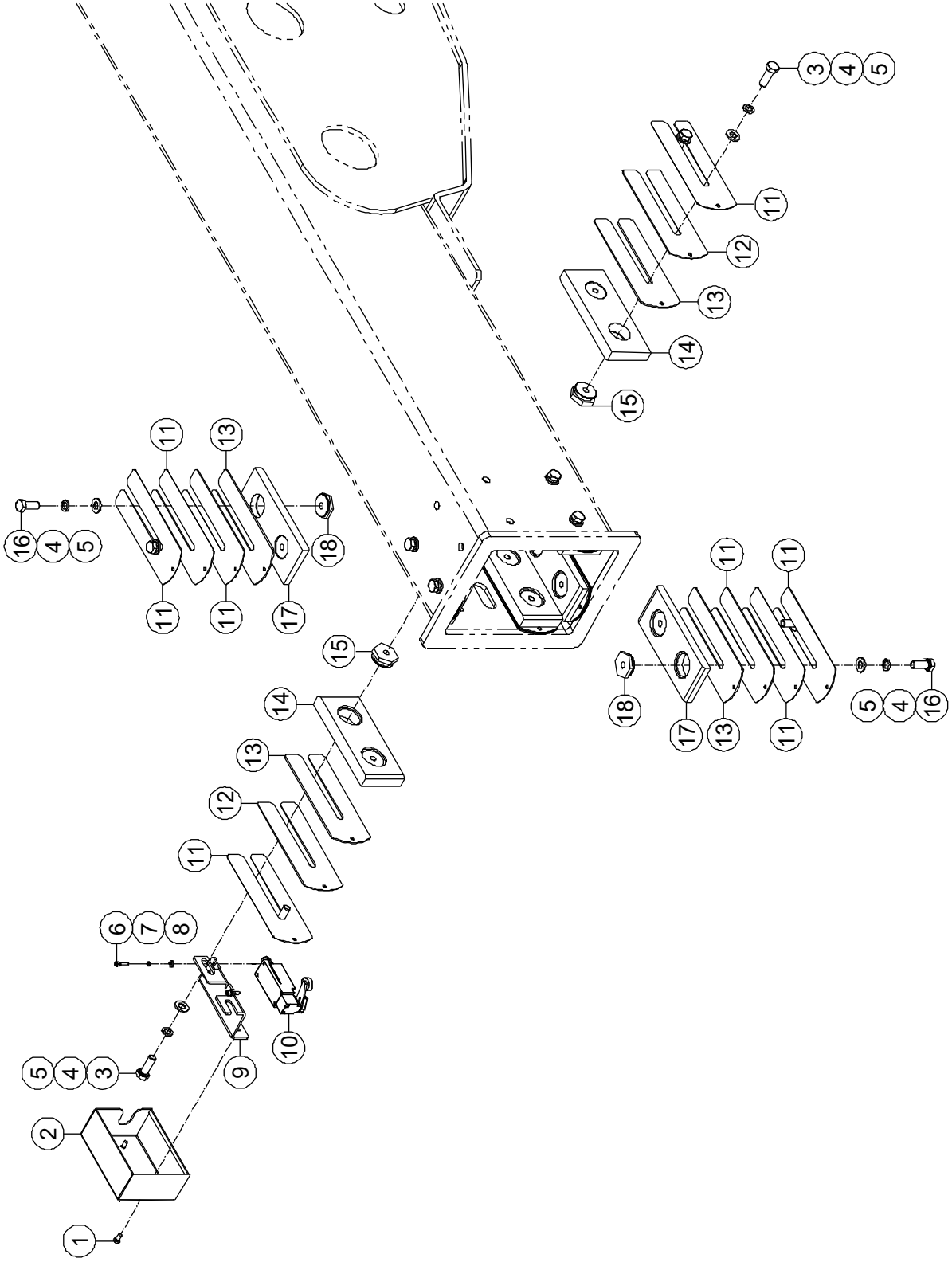

3-7 Base Boom Sliding Block Installations

Item	Part Number	Description	Qty.	Remark
1	00002319	Screw GB/T 818 M5 × 10 - H	2	
2	50000369	Cover, Switch	1	
3	00000683	Bolt GB/T 5783 M10 × 30	8	
4	00000679	Spring Washer GB/T 93 10	16	
5	00000615	Flat Washer GB/T 97.1 10	16	
6	00000604	Screw GB/T 70.1 M4×16	4	
7	00000779	Spring Washer GB/T 93 4	4	
8	00000778	Flat Washer GB/T 97.1 4	4	
9	50000371	Plate, Bracket	1	
10	00000748	Switch, Limit	1	
11	50000401	Shim	16	
12	50000046	Shim	4	
13	50000047	Shim	8	
14	50000403	Sliding Block	4	
15	50000480	Insert	8	
16	00000678	Bolt GB/T 5783 M10 × 25	8	
17	50000729	Sliding Block	4	
18	50000730	Insert	8	

3-8 Second Boom Sliding Block Installations

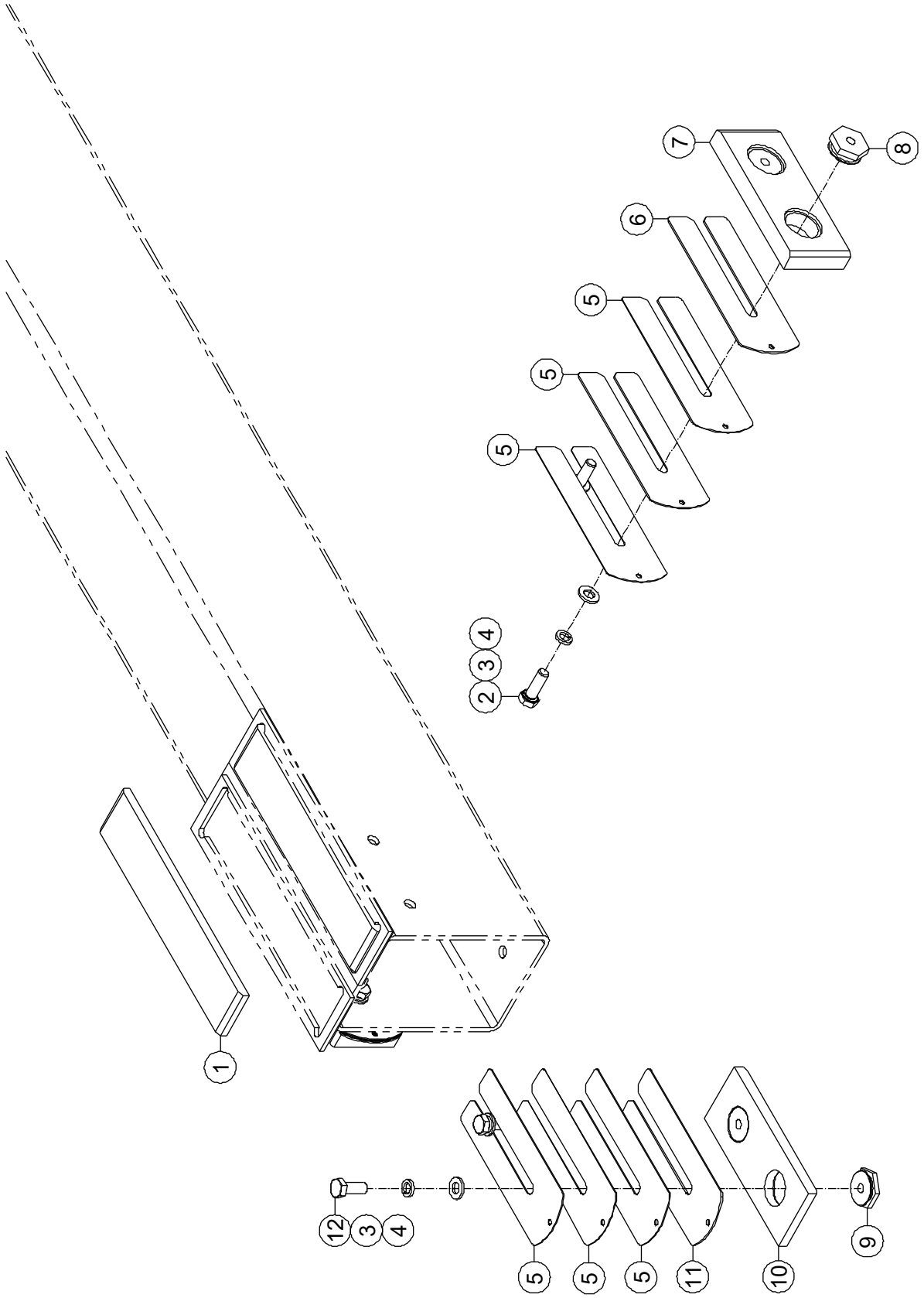

3-8 Second Boom Sliding Block Installations

Item	Part Number	Description	Qty.	Remark
1	50000725	Sliding Block	2	
2	00000683	Bolt GB/T 5783 M10 × 30	4	
3	00000679	Spring Washer GB/T 93 10	6	
4	00000615	Flat Washer GB/T 97.1 10	6	
5	50000401	Shim	9	
6	50000046	Shim	2	
7	50000403	Sliding Block	2	
8	50000480	Insert	4	
9	50000730	Insert	2	
10	50000729	Sliding Block	1	
11	50000047	Shim	1	
12	00000678	Bolt GB/T 5783 M10 × 25	2	

3-9 Telescope Cylinder Assembly Installations

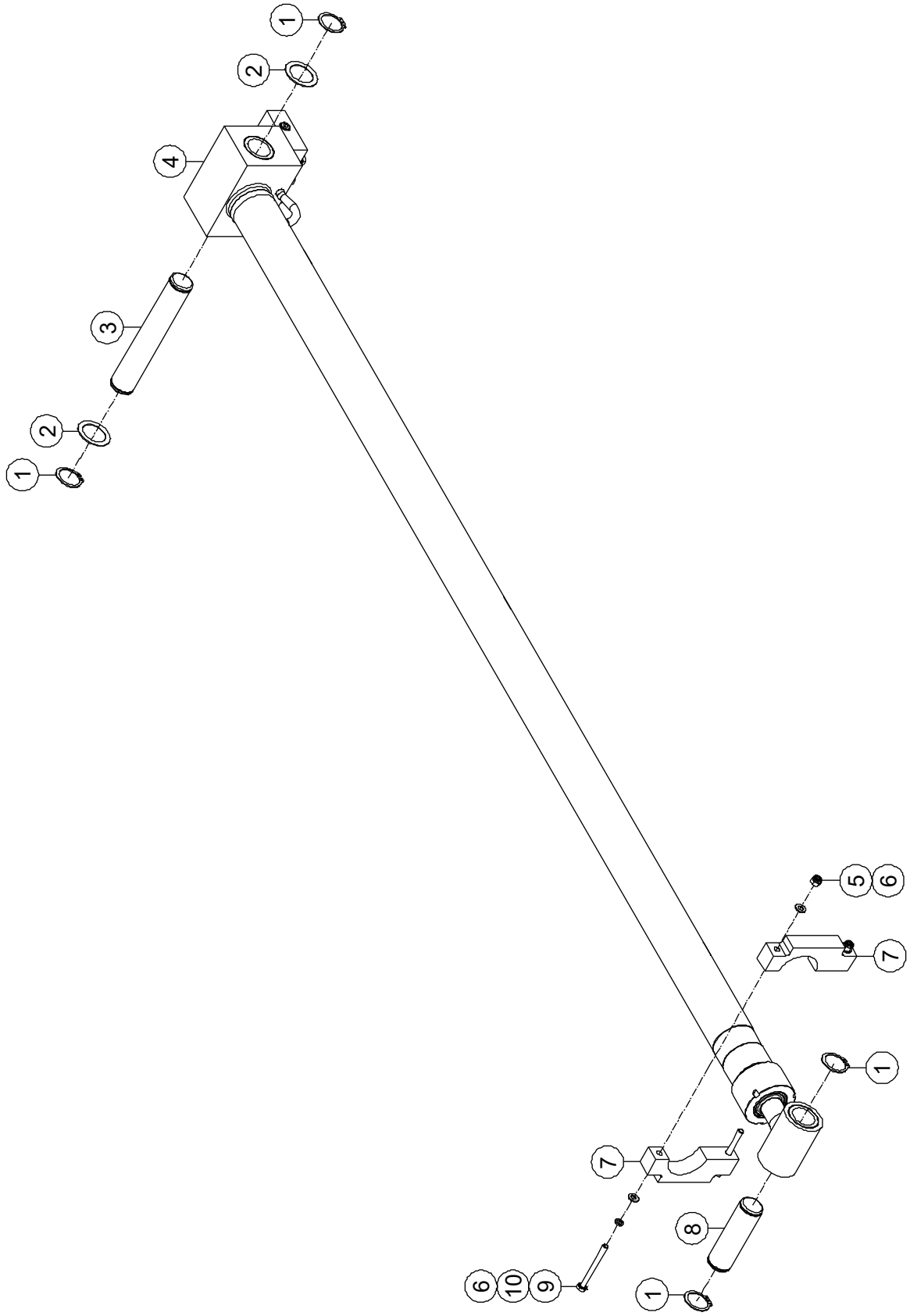

3-9 Telescope Cylinder Assembly Installations

Item	Part Number	Description	Qty.	Remark
1	00000936	Circlips GB/T 894.1-35	4	
2	50006513	Shim	2	
3	00000090	899-35200 Pin, Pivot	1	
4		Telescope Cylinder Assembly *(Refer to 5-4)*	1	
5	00001163	Nut GB/T 6182 M8	2	
6	00000608	Flat Washer GB/T 97.1 8	4	
7	50000794	Bracket	2	
8	00000081	899-35108 Pin, Pivot	1	
9	00001026	Bolt GB/T 5782 M8 × 80	2	
10	00000609	Spring Washer GB/T 93 8	2	

3-10 Carrier System Installations

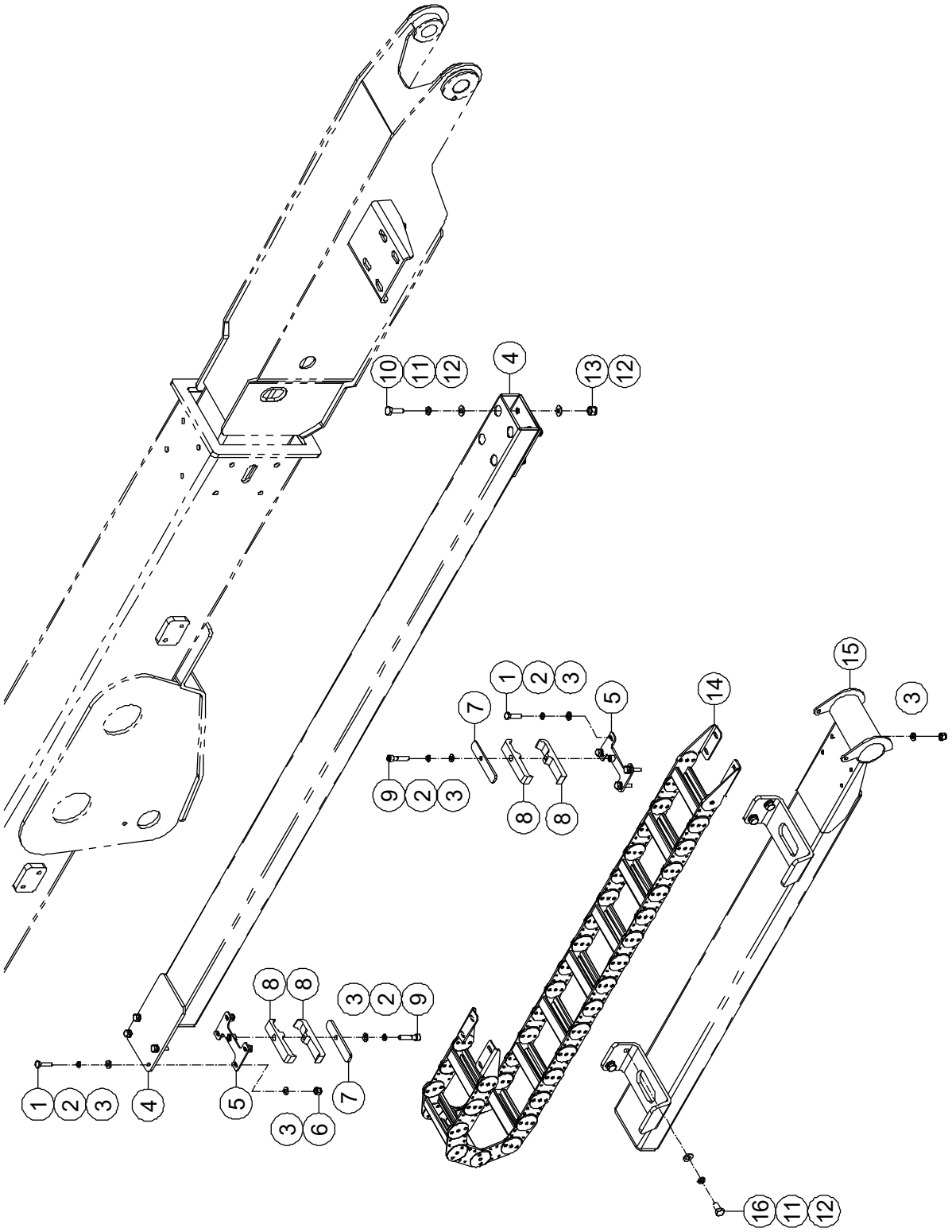

3-10 Carrier System Installations

Item	Part Number	Description	Qty.	Remark
1	00000995	Bolt GB/T 5783 M8 × 30	8	
2	00000609	Spring Washer GB/T 93 8	10	
3	00000608	Flat Washer GB/T 97.1 8	18	
4	50000027	Cable Tube	1	BA16NE
	50001074	Cable Tube	1	BA18NE
5	50000364	Plate, Weldment	2	
6	00001163	Nut GB/T 6182 M8	8	
7	50000368	Pad, Rubber	2	
8	50000367	Plate, Clamp	4	
9	00000744	Screw GB/T 70 M8 × 40	2	
10	00000683	Bolt GB/T 5783 M10 × 30	4	
11	00000679	Spring Washer GB/T 93 10	8	
12	00000615	Flat Washer GB/T 97.1 10	12	
13	00000623	Nut GB/T 6182 M10	4	
14	50003091	Carrier	1	BA16NE
	50001078	Carrier	1	BA18NE
15	50000031	Cable Track Carrier Weldment	1	BA16NE
	50001076	Cable Track Carrier Weldment	1	BA18NE
16	00000674	Bolt GB/T 5783 M10 × 20	4	

3-11 Base Boom Accessories Installations

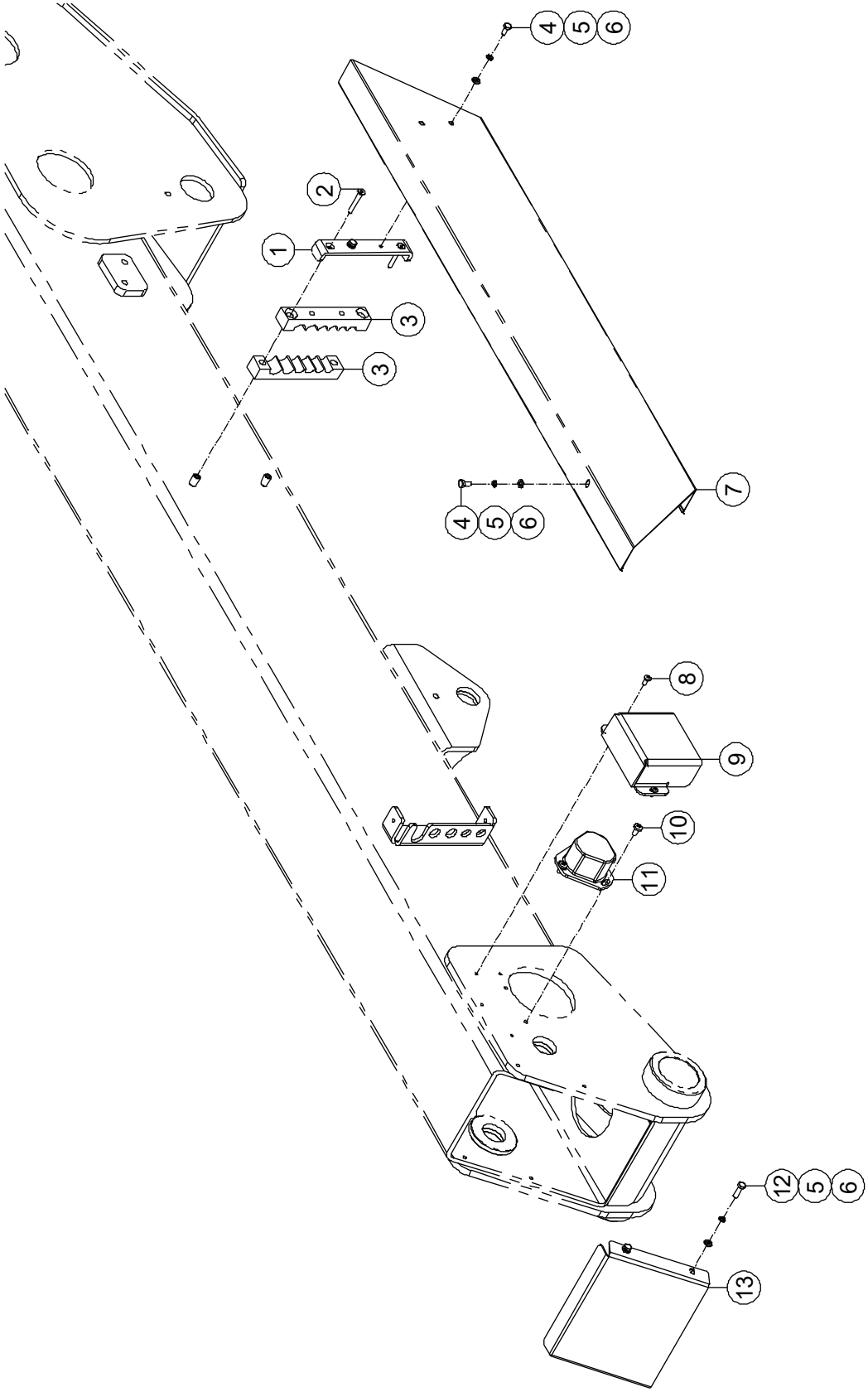

3-11 Base Boom Accessories Installations

Item	Part Number	Description	Qty.	Remark
1	50000363	Pad, Rubber	1	
2	00000834	Screw GB/T 70.3 M6×40	2	
3	50000362	Plate	2	
4	00000745	Bolt GB/T 5783 M6 × 12	4	
5	00000621	Spring Washer GB/T 93 6	4	
6	00000620	Flat Washer GB/T 97.1 6	4	
7	50000750	Cover	1	
8	00002319	Screw GB/T 818 M5 × 10 - H	3	
9	50000751	Cover, Sensor	1	
10	00001060	Screw GB/T 818 M6 × 12 - H	3	
11	00000643	Sensor, Angle	1	
12	00000743	Bolt GB/T 5783 M6 × 20	4	
13	50000749	Cover, Boom	1	

3-12 Upper Lifting Cylinder Assembly Installations

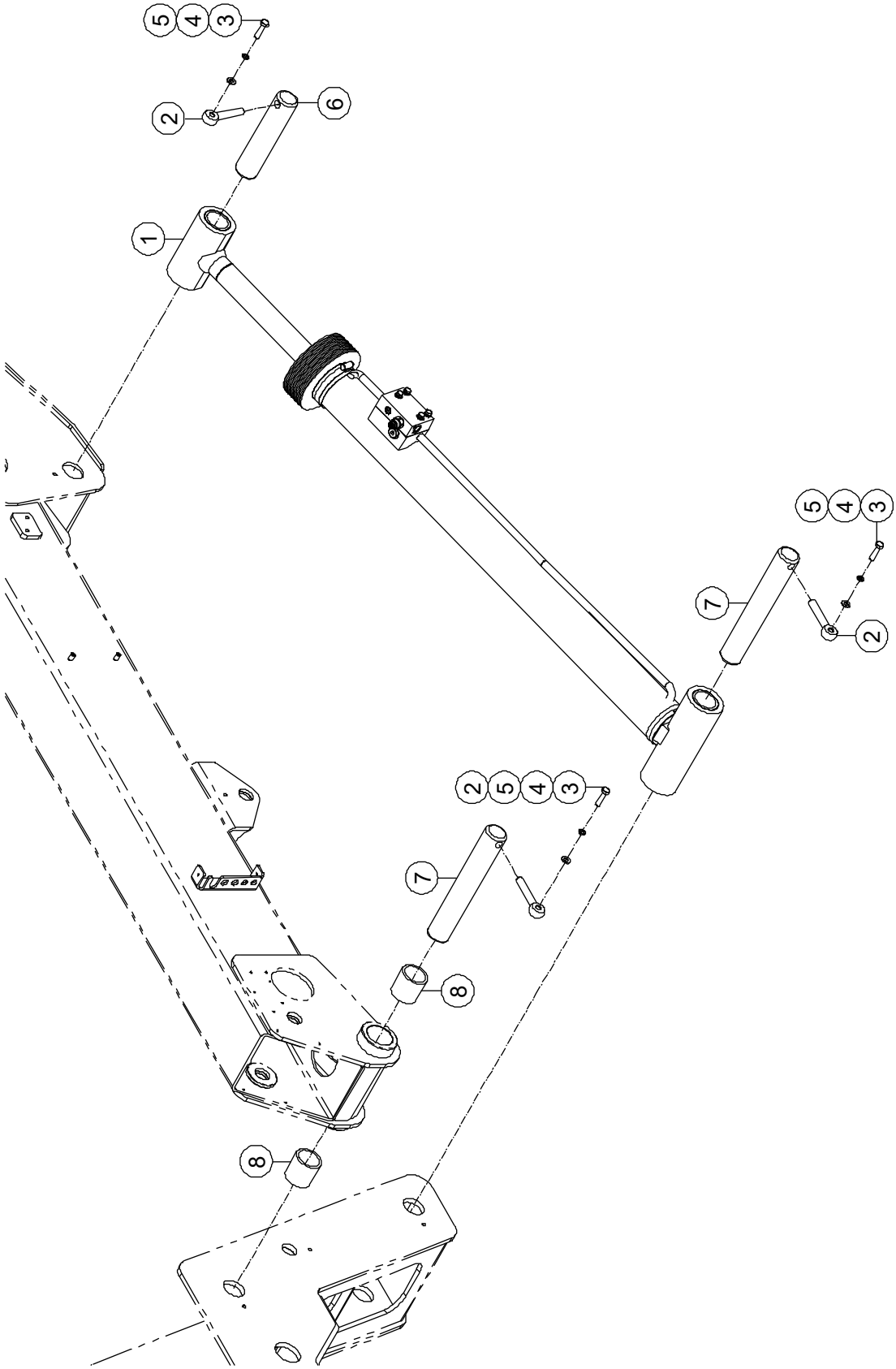

3-12 Upper Lifting Cylinder Assembly Installations

Item	Part Number	Description	Qty.	Remark
1		Upper Lifting Cylinder Assembly *(Refer to 5-5)*	1	
2	00003089	8902-16095B Pin, Lock	3	
3	00001041	Bolt GB/T 5783 M10 × 40	3	
4	00000679	Spring Washer GB/T 93 10	3	
5	00000615	Flat Washer GB/T 97.1 10	3	
6	00000128	895-50211 Pin, Pivot	1	
7	00000131	895-50301 Pin, Pivot	2	
8	00000428	8813-506060 Sleeve Bearing	2	

3-13 Master Cylinder Assembly Installations

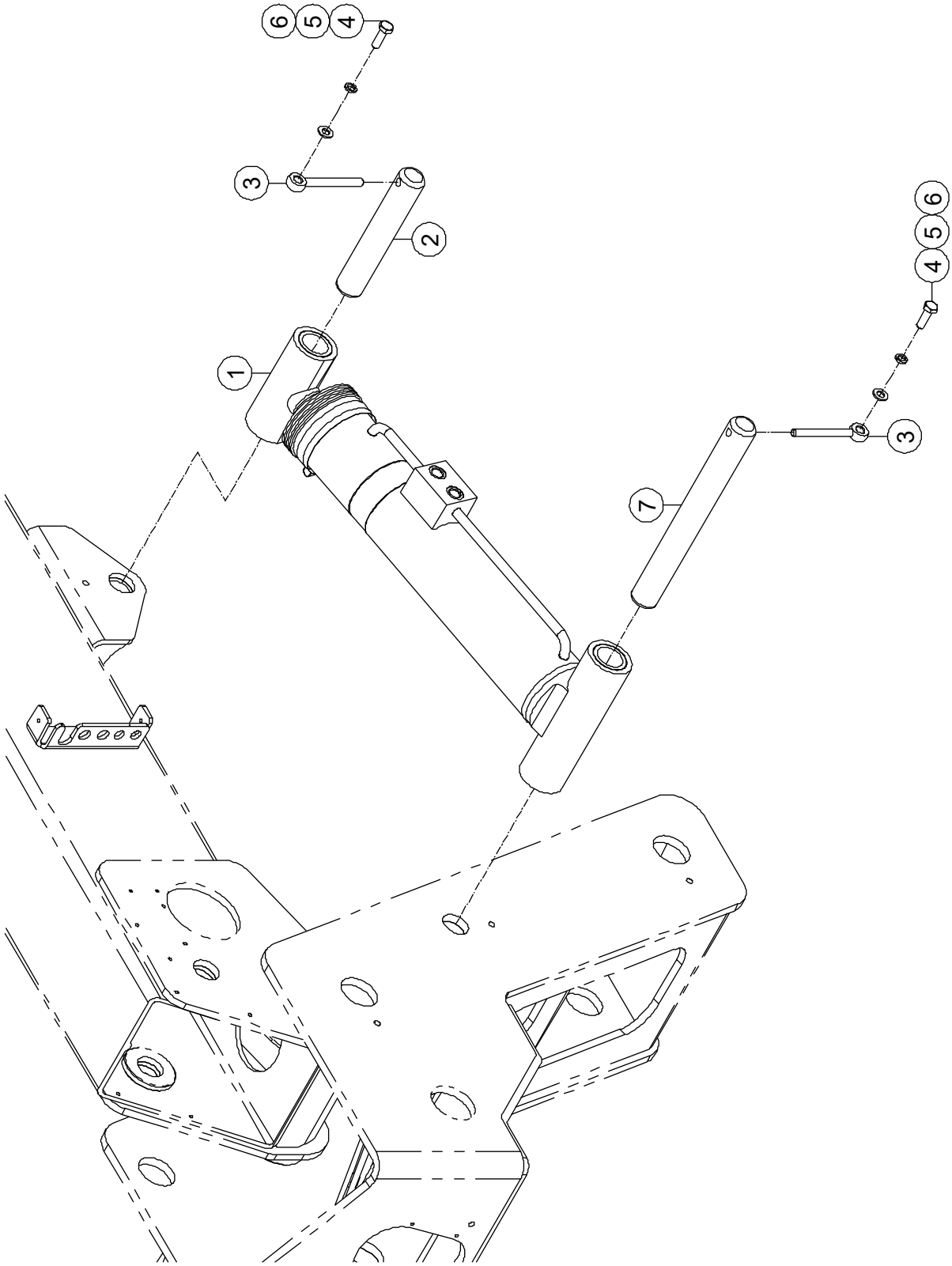

3-13 Master Cylinder Assembly Installations

Item	Part Number	Description	Qty.	Remark
1		Master Cylinder Assembly *(Refer to 5-6)*	1	
2	00000073	895-35188 Pin, Pivot	1	
3	00002481	8902-10100 Pin, Lock	2	
4	00000683	Bolt GB/T 5783 M10 × 30	2	
5	00000679	Spring Washer GB/T 93 10	2	
6	00000615	Flat Washer GB/T 97.1 10	2	
7	00000102	895-35295 Pin, Pivot	1	

3-14 Slave Cylinder Assembly Installations

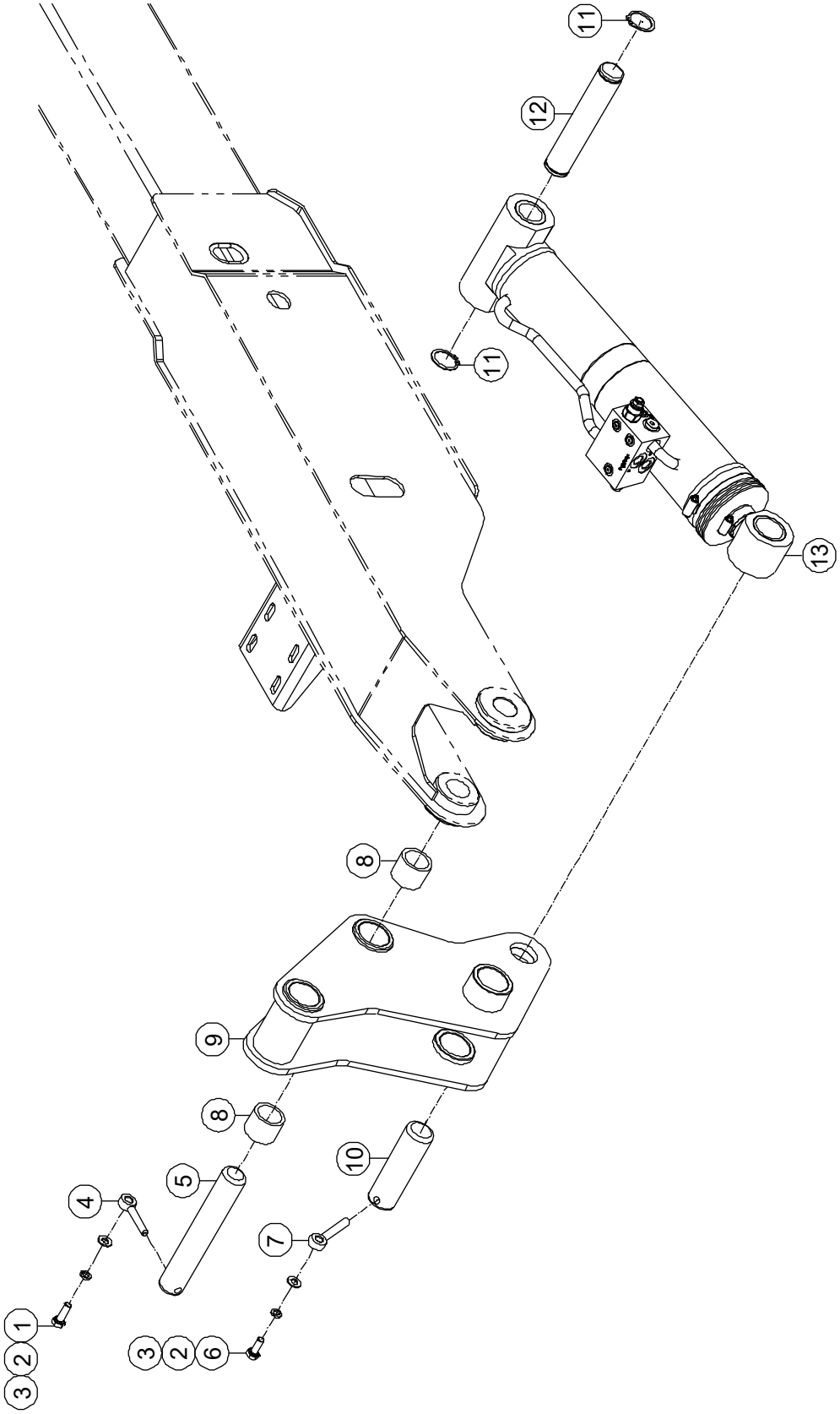

3-14 Slave Cylinder Assembly Installations

Item	Part Number	Description	Qty.	Remark
1	00000683	Bolt GB/T 5783 M10 × 30	1	
2	00000679	Spring Washer GB/T 93 10	2	
3	00000615	Flat Washer GB/T 97.1 10	2	
4	00000219	8902-10060 Pin, Lock	1	
5	00000098	895-35208 Pin, Pivot	1	
6	00000678	Bolt GB/T 5783 M10 × 25	1	
7	00000220	8902-10080 Pin, Lock	1	
8	00000416	8813-354535 Sleeve Bearing	2	
9	50000813	Junction	1	
10	00006962	895-40125 Pin, Pivot	1	
11	00000936	Circlips GB/T 894.1-35	2	
12	00000089	899-35174 Pin, Pivot	1	
13		Slave Cylinder Assembly *(Refer to 5-7)*	1	

3-15 Articulating JIB Installations

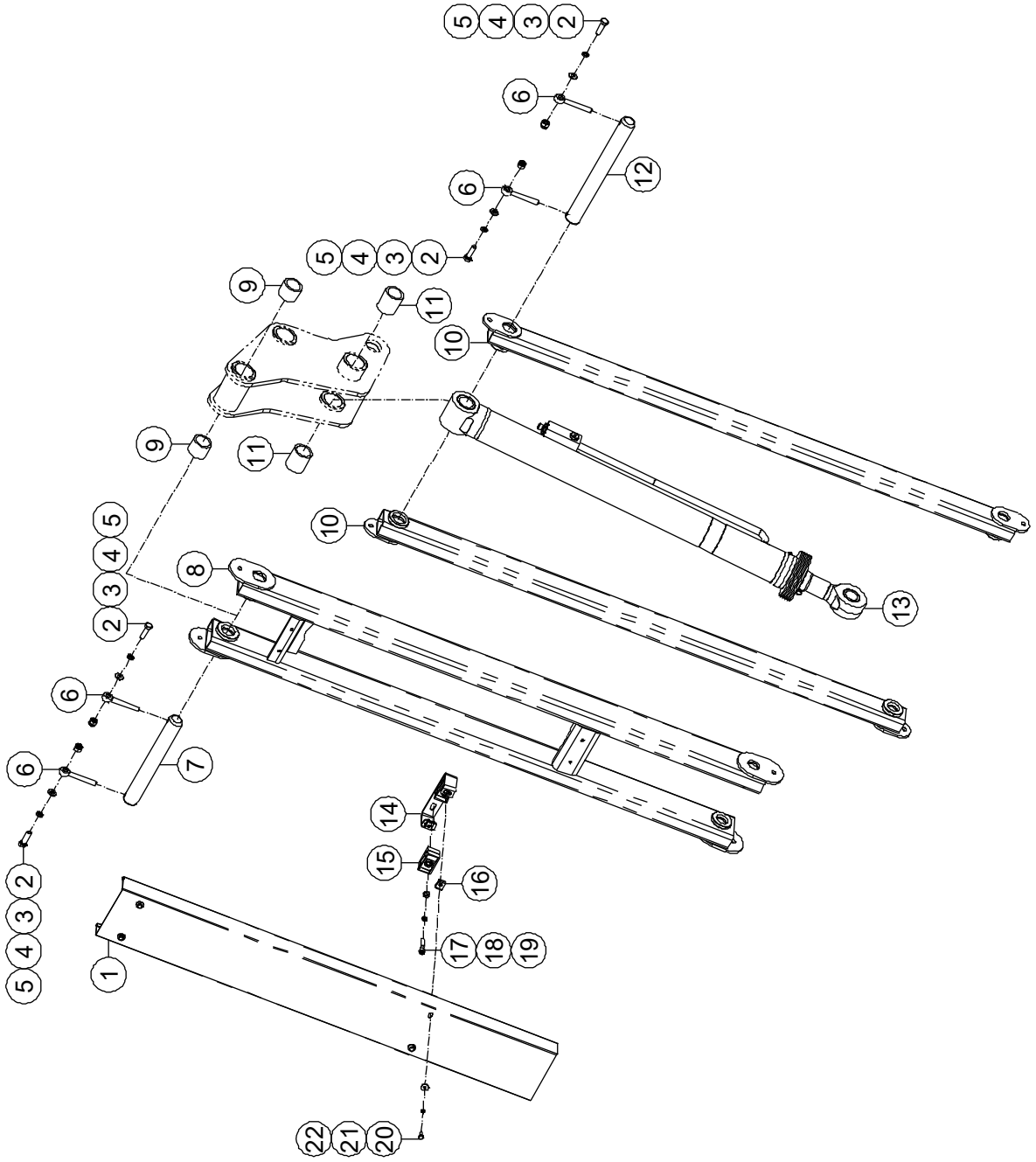

3-15 Articulating JIB Installations

Item	Part Number	Description	Qty.	Remark
1	50002730	Cover	1	
2	00000684	Bolt GB/T 5783 M10 × 35	4	
3	00000679	Spring Washer GB/T 93 10	4	
4	00000615	Flat Washer GB/T 97.1 10	4	
5	00000623	Nut GB/T 6182 M10	4	
6	00000220	8902-10080 Pin, Lock	4	
7	00000051	897-35243 Pin, Pivot	1	
8	50000806	Linker, Upper	1	
9	00000416	8813-354535 Sleeve Bearing	2	
10	50000816	Linker, Lower	2	
11	00000417	8813-354550 Sleeve Bearing	2	
12	00000050	897-35300 Pin, Pivot	1	
13		Jib Cylinder Assembly *(Refer to 5-8)*	1	
14	50002729	Plate	2	
15	00000538	Clamp	2	
16	50000112	Nut QC/T 885 M6	4	
17	00000744	Screw GB/T 70 M8 × 40	4	
18	00000609	Spring Washer GB/T 93 8	4	
19	00000608	Flat Washer GB/T 97.1 8	4	
20	00000818	Bolt GB/T 5783 M6 × 16	4	
21	00000621	Spring Washer GB/T 93 6	4	
22	00002583	Flat Washer GB/T 96.1 6	4	

3-16 Rotate Cylinder Assembly Installations

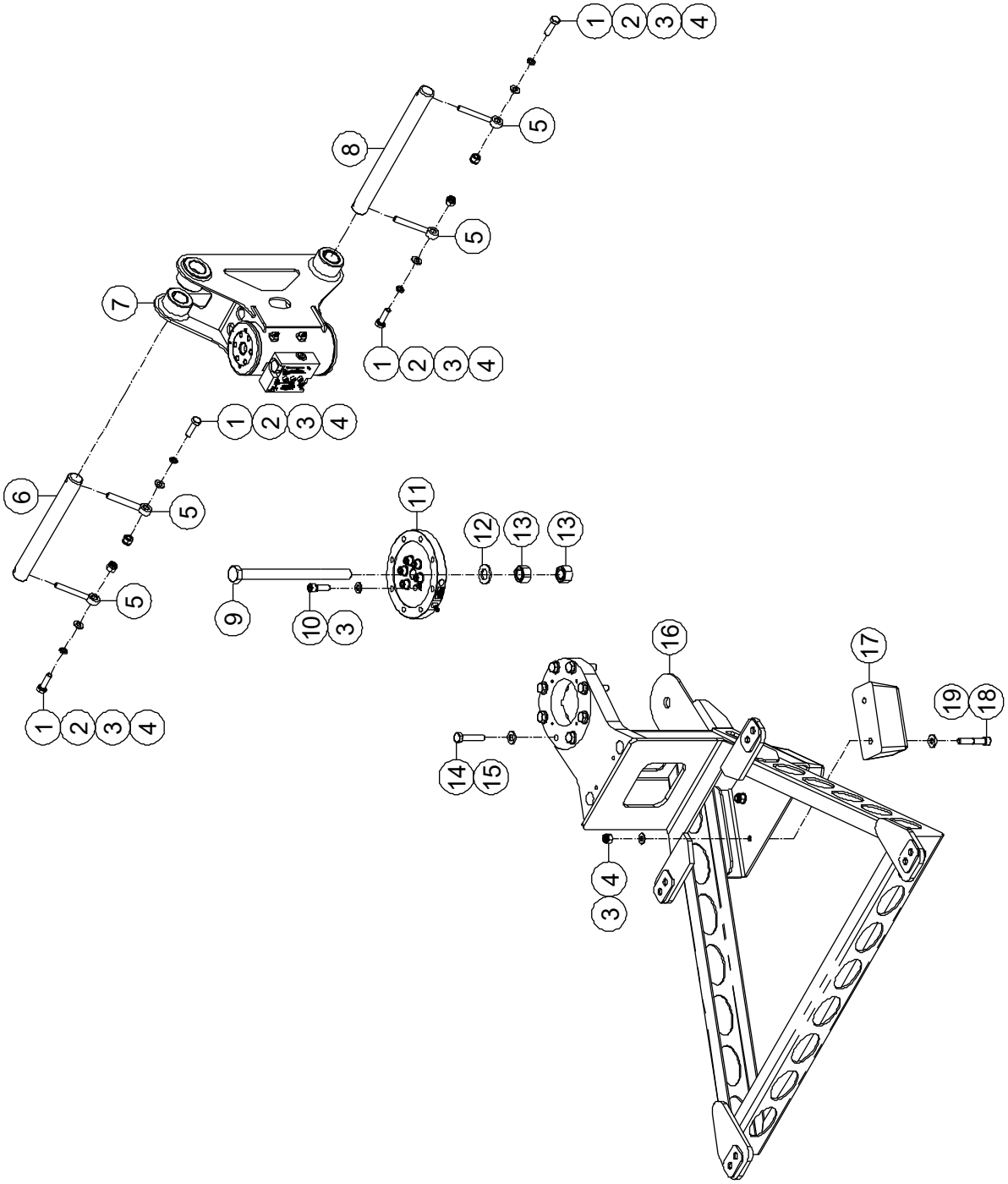

3-16 Rotate Cylinder Assembly Installations

Item	Part Number	Description	Qty.	Remark
1	00000684	Bolt GB/T 5783 M10 × 35	4	
2	00000679	Spring Washer GB/T 93 10	4	
3	00000615	Flat Washer GB/T 97.1 10	14	
4	00000623	Nut GB/T 6182 M10	8	
5	00000220	8902-10080 Pin, Lock	4	
6	00000045	897-30243 Pin, Pivot	1	
7	00001981	Rotate Cylinder Assembly	1	
8	00000046	897-30300 Pin, Pivot	1	
9	00002067	Bolt GB/T 5782 M20 × 260	1	
10	00002238	Screw GB/T 70 M10 × 35	6	
11	00002065	Load Sensor	1	
12	00001050	Flat Washer GB/T 97.1 20	1	
13	00002066	Nut GB/T 6170 M20	2	
14	00002923	Bolt GB/T 5783 M12 × 55	8	
15	00000814	Flat Washer GB/T 97.1 12	8	
16	50000684	Support	1	
17	10000041	Plate, Rubber	2	
18	00000614	Screw GB/T 70 M10 × 60	4	
19	92100049	Washer	4	

3-17 Articulating JIB Valve Block Installations

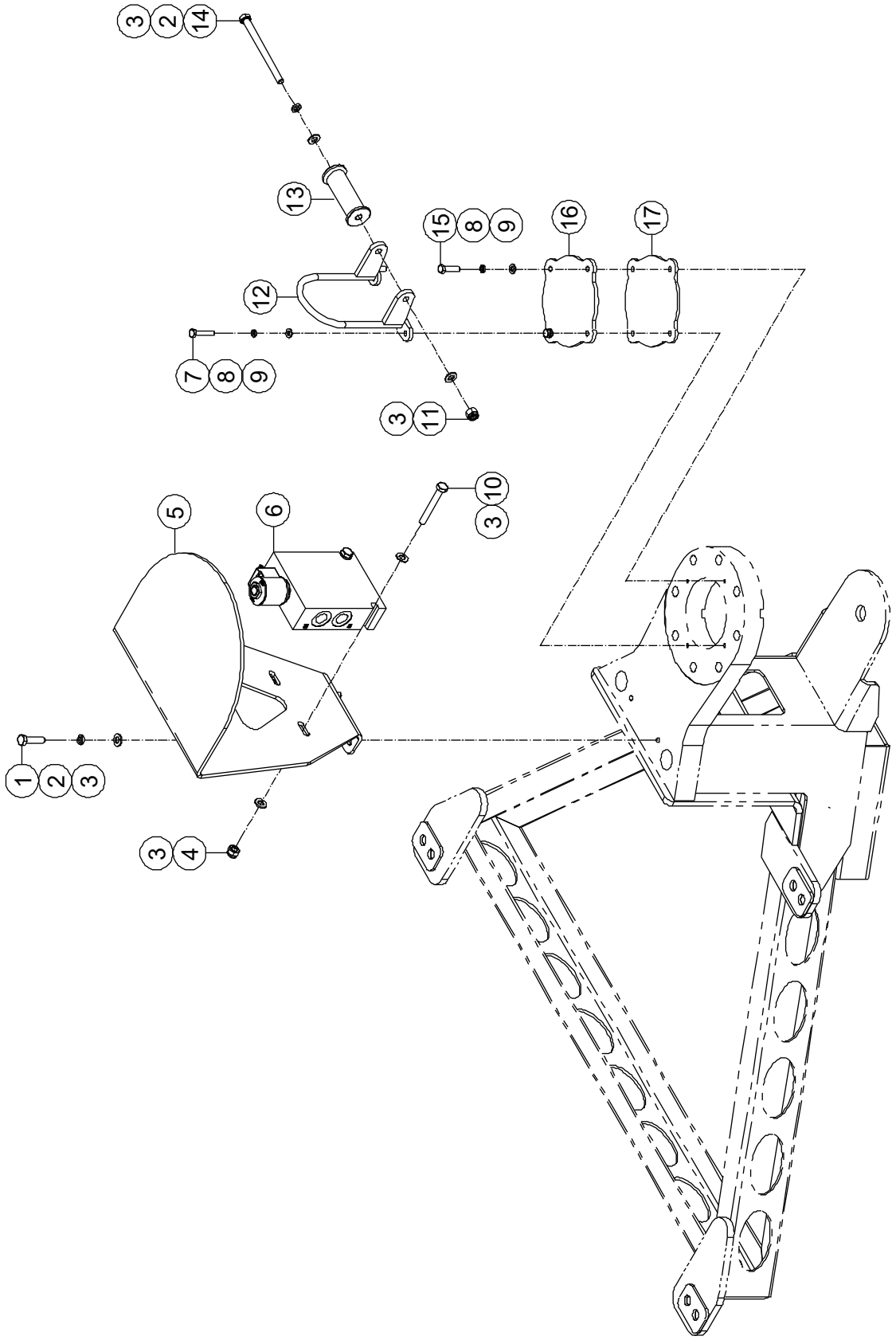

3-17 Articulating JIB Valve Block Installations

Item	Part Number	Description	Qty.	Remark
1	00000995	Bolt GB/T 5783 M8 × 30	2	
2	00000609	Spring Washer GB/T 93 8	3	
3	00000608	Flat Washer GB/T 97.1 8	8	
4	00000994	Nut GB/T 889.1 M8	2	
5	50000620	Bracket	1	
6	00000505	Directional Valve Assembly *(Refer to 3-18)*	1	
7	00000775	Bolt GB/T 5783 M6 × 30	2	
8	00000621	Spring Washer GB/T 93 6	4	
9	00000620	Flat Washer GB/T 97.1 6	4	
10	00001851	Bolt GB/T 5783 M8 × 60	2	
11	00001163	Nut GB/T 6182 M8	1	
12	50000581	Clamp	1	
13	50002764	Wheel, Nylon	1	
14	00003146	Bolt GB/T 5782 M8 × 110	1	
15	00000619	Bolt GB/T 5783 M6 × 25	2	
16	50000580	Cover	1	
17	50000579	Plate, Seal	1	

3-18 Directional Valve Assembly

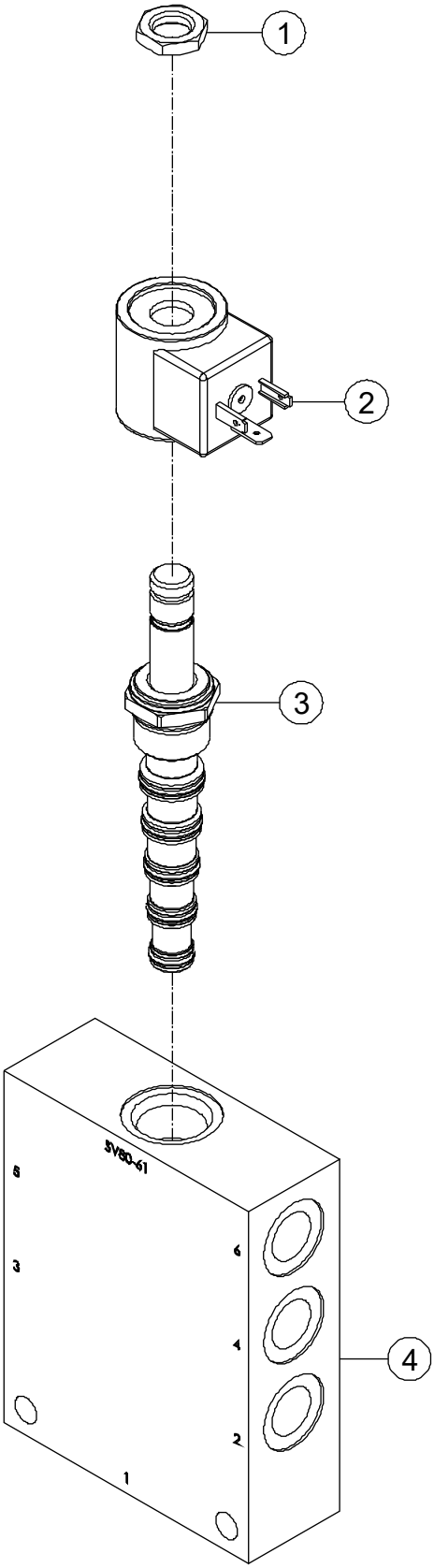

3-18 Directional Valve Assembly

Item	Part Number	Description	Qty.	Remark
1	00003017	Nut	1	
2	00002043	Coil	1	
3	00003595	Cartridge without Coil	1	
4	00003598	Body	1	

3-19 Directional Valve Assembly

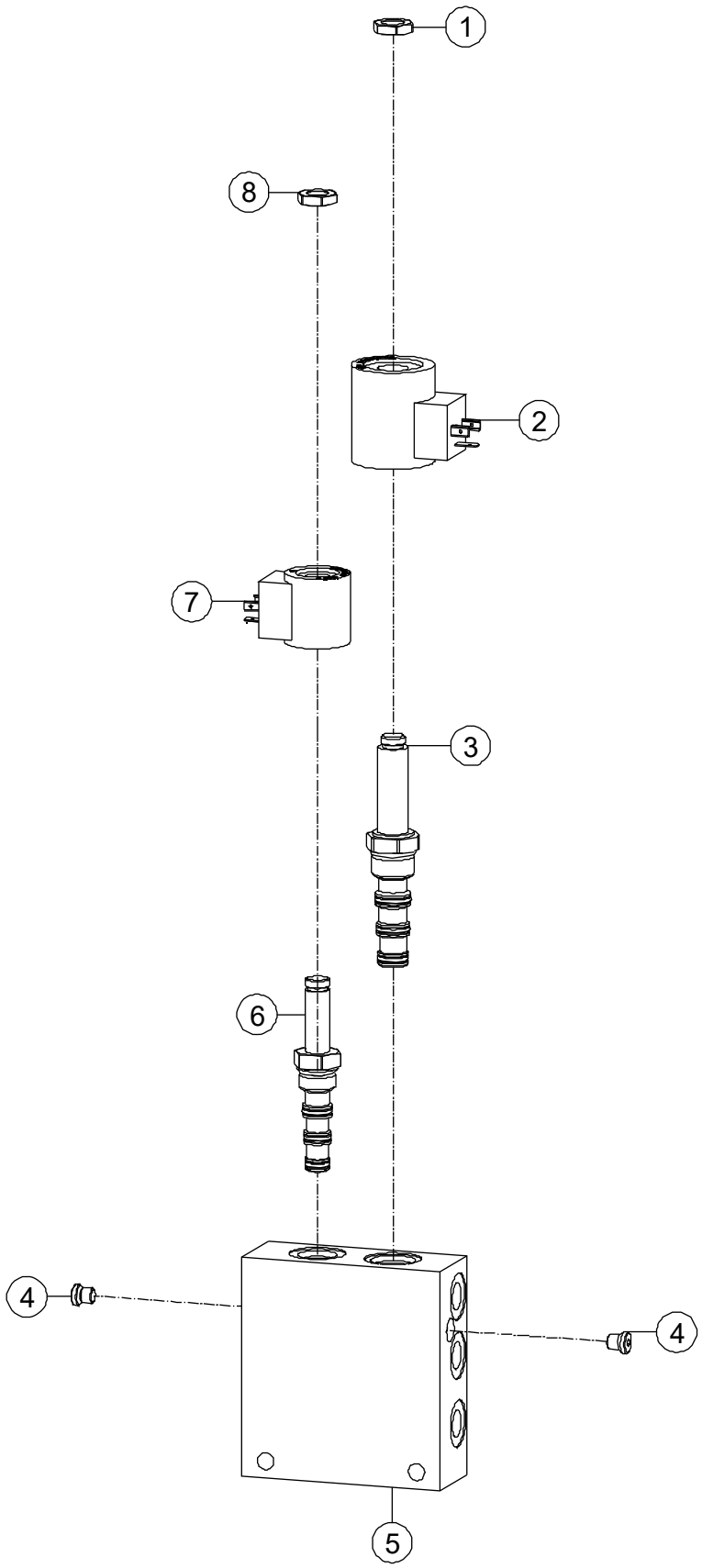

3-19 Directional Valve Assembly

Item	Part Number	Description	Qty.	Remark
1	00009502	Nut	1	
2	00009506	Coil	1	
3	00009504	Cartridge without Coil	1	
4	00002999	Plug	2	
5	00009508	Body	1	
6	00009505	Cartridge without Coil	1	
7	00009507	Coil	1	
8	00009503	Nut	1	

Section 4
Platform

4-1 Platform Installations

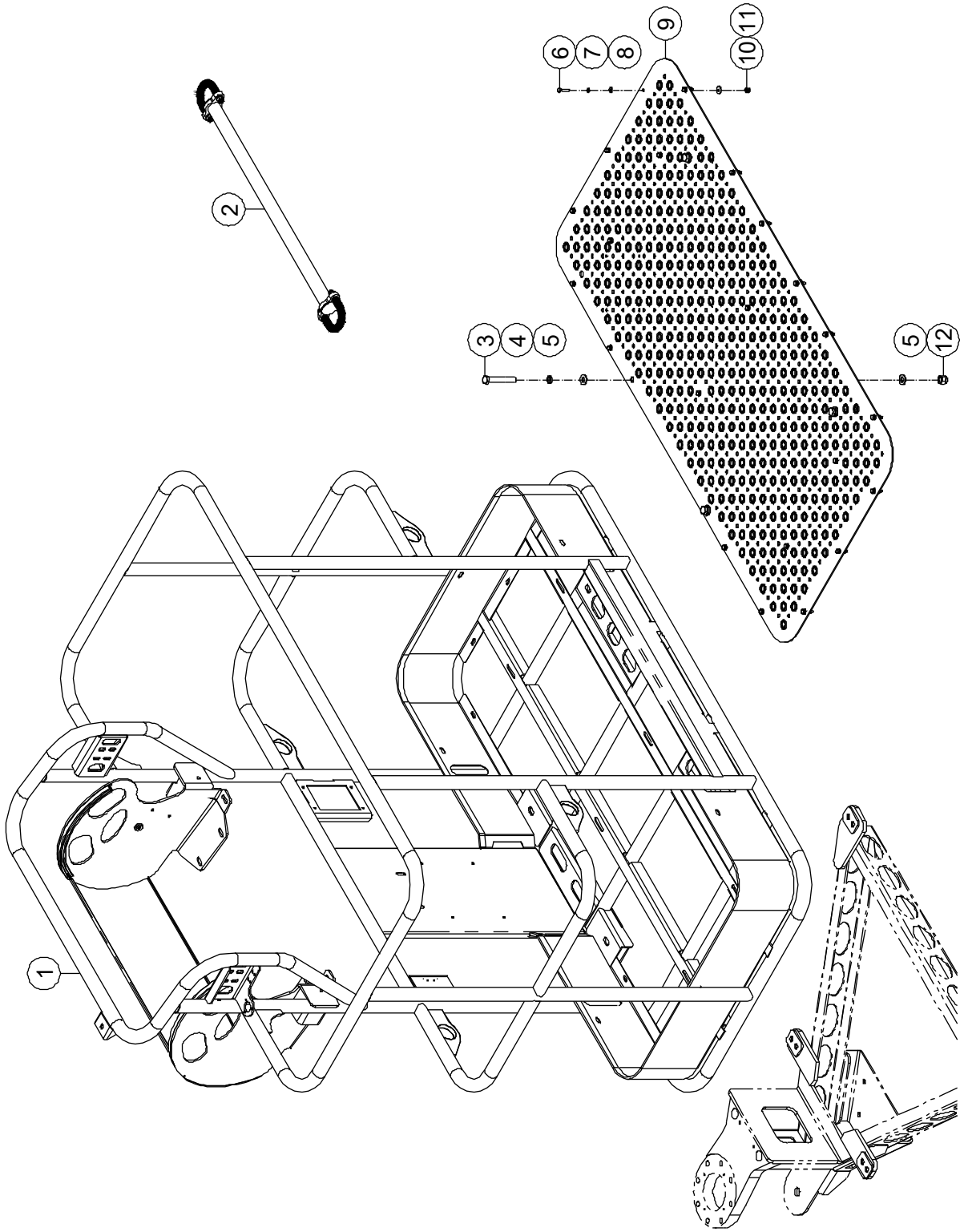

4-1 Platform Installations

Item	Part Number	Description	Qty.	Remark
1	50008431	Platform	1	
2		Gate Assembly *(Refer to 4-3)*	1	
3	00002527	Bolt GB/T 5782 M12 × 80	4	
4	00000815	Spring Washer GB/T 93 12	4	
5	00000814	Flat Washer GB/T 97.1 12	8	
6	00000619	Bolt GB/T 5783 M6 × 25	22	
7	00000621	Spring Washer GB/T 93 6	22	
8	00000620	Flat Washer GB/T 97.1 6	22	
9	50008447	Deck Plate	1	
10	00001033	Nut GB/T 6182 M6	22	
11	00002583	Flat Washer GB/T 96.1 6	22	
12	00001249	Nut GB/T 6182 M12	4	

4-2 Platform Assembly

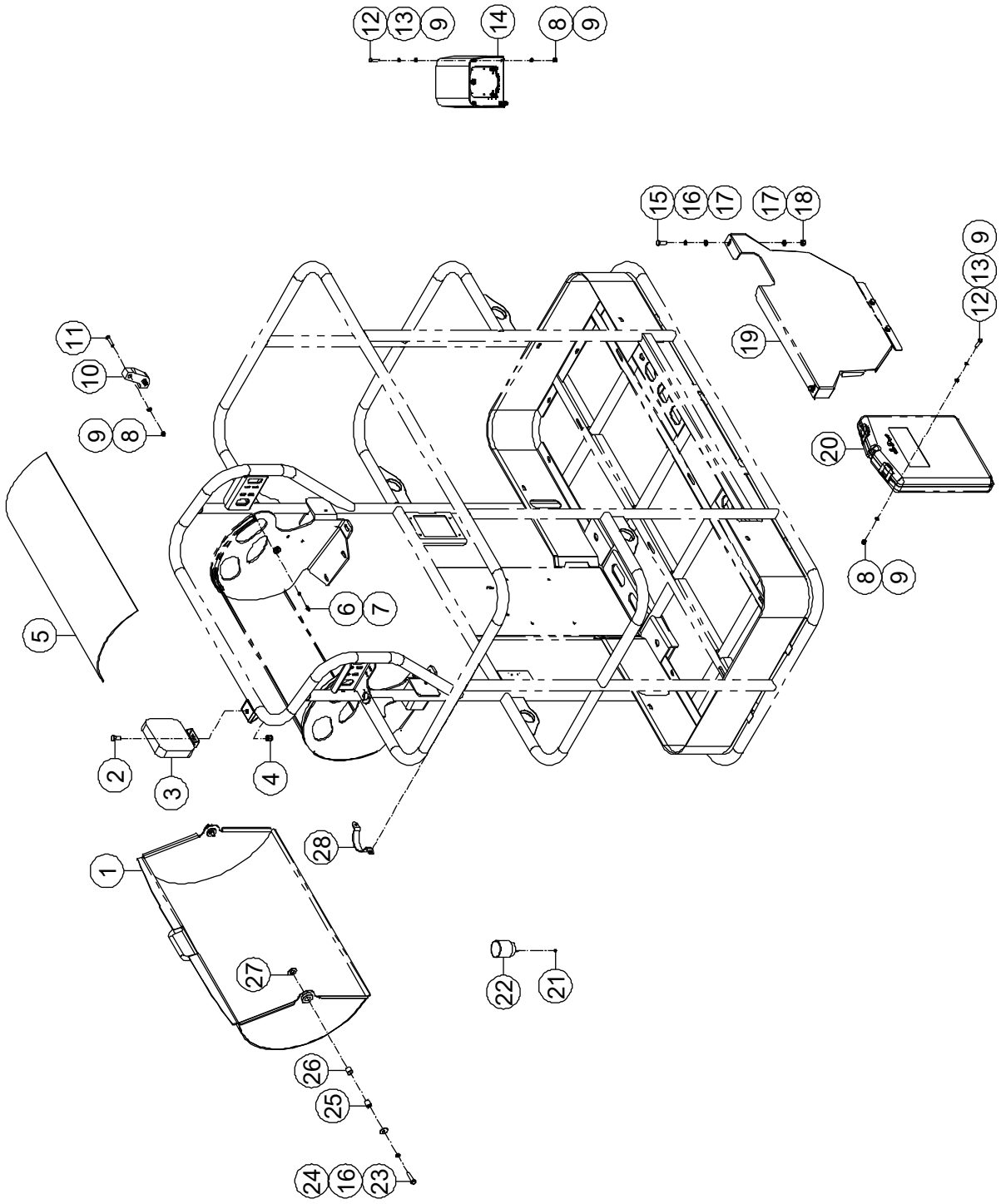

4-2 Platform Assembly

Item	Part Number	Description	Qty.	Remark
1	92000051	Shield	1	
2	00000674	Bolt GB/T 5783 M10 × 20	1	
3	00006753	Head Light	1	
4	00000623	Nut GB/T 6182 M10	1	
5	92000228	Shield, Plastic	1	
6	00001030	Screw GB/T 70 M5 × 10	2	
7	00000688	Nut GB/T 6170 M5	2	
8	00001033	Nut GB/T 6182 M6	12	
9	00000620	Flat Washer GB/T 97.1 6	20	
10	92000057	Plate, Limit	2	
11	00000863	Screw GB/T 70.3 M6×35	4	
12	00000619	Bolt GB/T 5783 M6 × 25	8	
13	00000621	Spring Washer GB/T 93 6	8	
14	00005212	Footswitch	1	
15	00000993	Bolt GB/T 5783 M8 × 25	4	
16	00000609	Spring Washer GB/T 93 8	6	
17	00000608	Flat Washer GB/T 97.1 8	8	
18	00001163	Nut GB/T 6182 M8	4	
19	92000050	Plate, Decal	1	
20	50000555	Box, Manual	1	
21	00003700	Nut GB/T 889.1 M3	3	
22	00005190	Beacon	1	
23	00002488	Bolt GB/T 5783 M8 × 35	2	
24	00002000	Flat Washer GB/T 96.1 8	2	
25	92030530	Axes	2	
26	92030523	Bushing	2	
27	92030152	Washer	2	
28	50000554	Clamp	1	

4-3 Gate Assembly

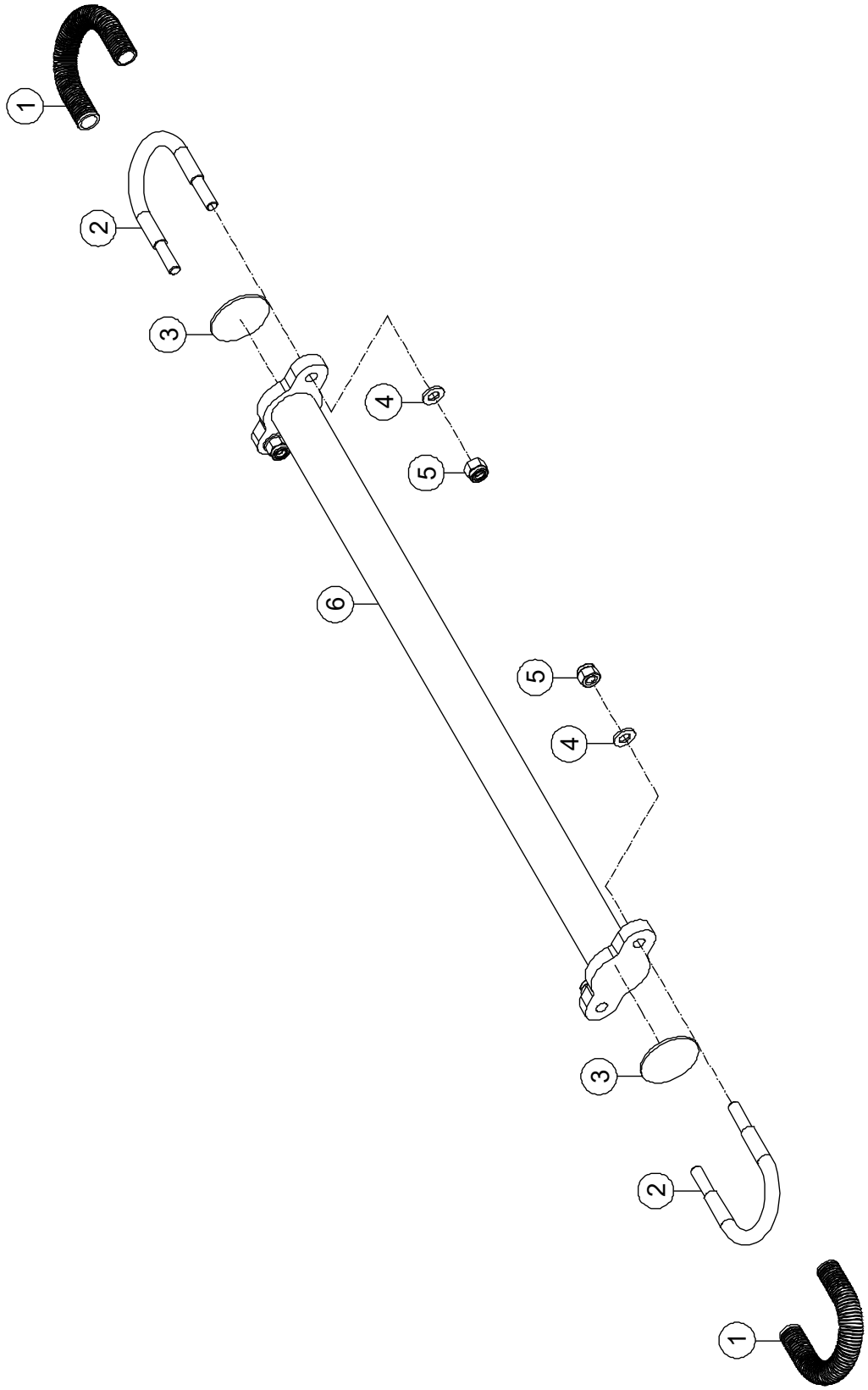

4-3 Gate Assembly

Item	Part Number	Description	Qty.	Remark
1	92100232	Jacket	2	
2	92100228	Clamp	2	
3	92100249	Anti-Scratch	2	
4	00000608	Nut GB/T 6182 M8	4	
5	00001163	Flat Washer GB/T 97.1 8	4	
6	92100229	Gate, Lift	1	

4-4 Lift Guard Contact Alarm

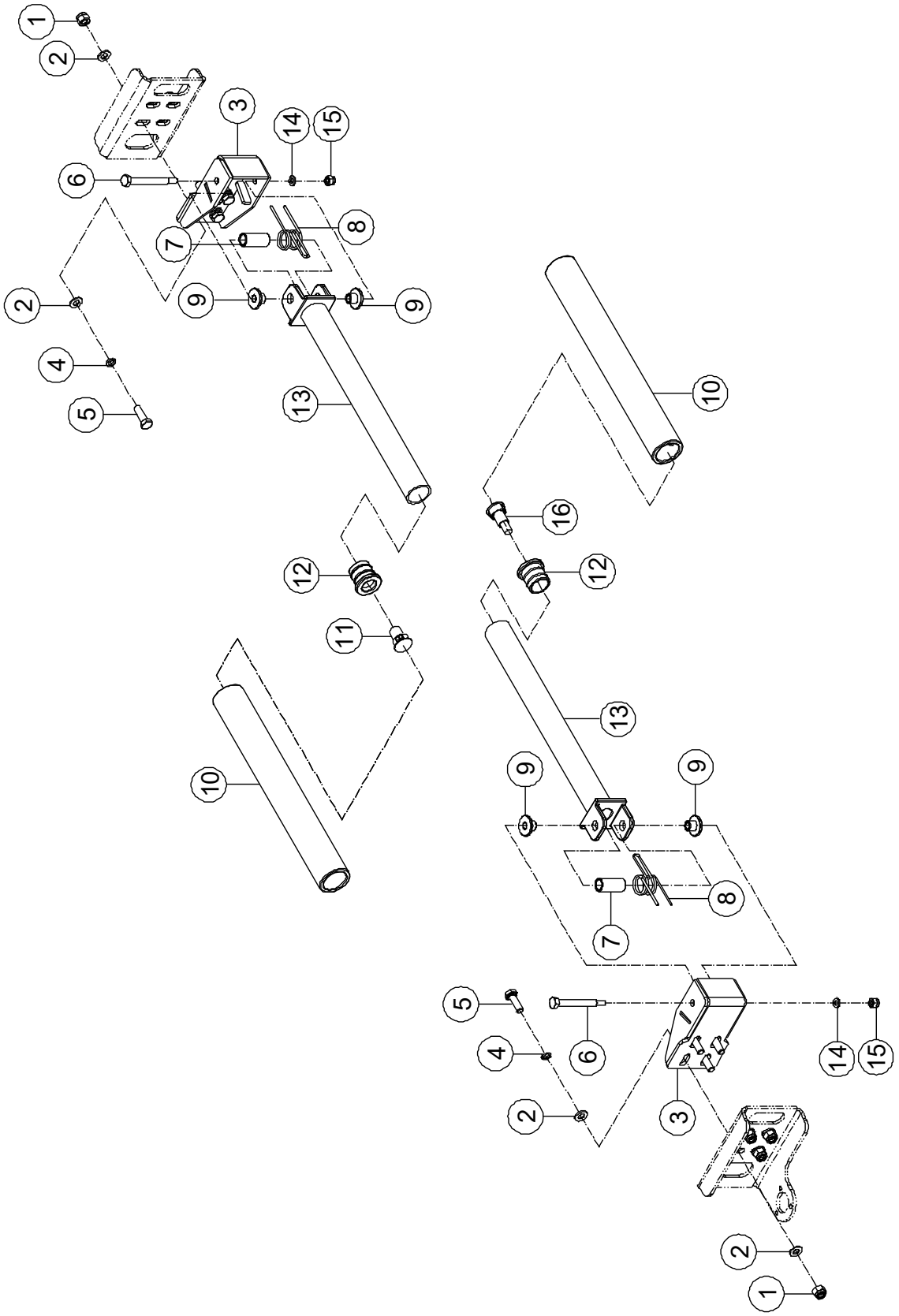

4-4 Lift Guard Contact Alarm

Item	Part Number	Description	Qty.	Remark
1	00001163	Nut GB/T 6182 M8	8	
2	00000608	Flat Washer GB/T 97.1 8	16	
3	92000231	Bracket, Contact Alarm	2	
4	00000609	Spring Washer GB/T 93 8	8	
5	00000993	Bolt GB/T 5783 M8 × 25	8	
6	92000239	Pin	2	
7	92000238	Tube	2	
8	92000237	Spring	2	
9	92000236	JDBB-1013 Bearing	4	
10	92000253	Jacket, Foam	2	
11	00006226	Magnet	1	
12	92000243	Plug, Nylon	2	
13	92000240	Tube, Contact Alarm	2	
14	00000620	Flat Washer GB/T 97.1 6	2	
15	00001033	Nut GB/T 6182 M6	2	
16	00006225	Door Magnetic Switch	1	

Section 5
Cylinder

5-1 Steer Cylinder Assembly

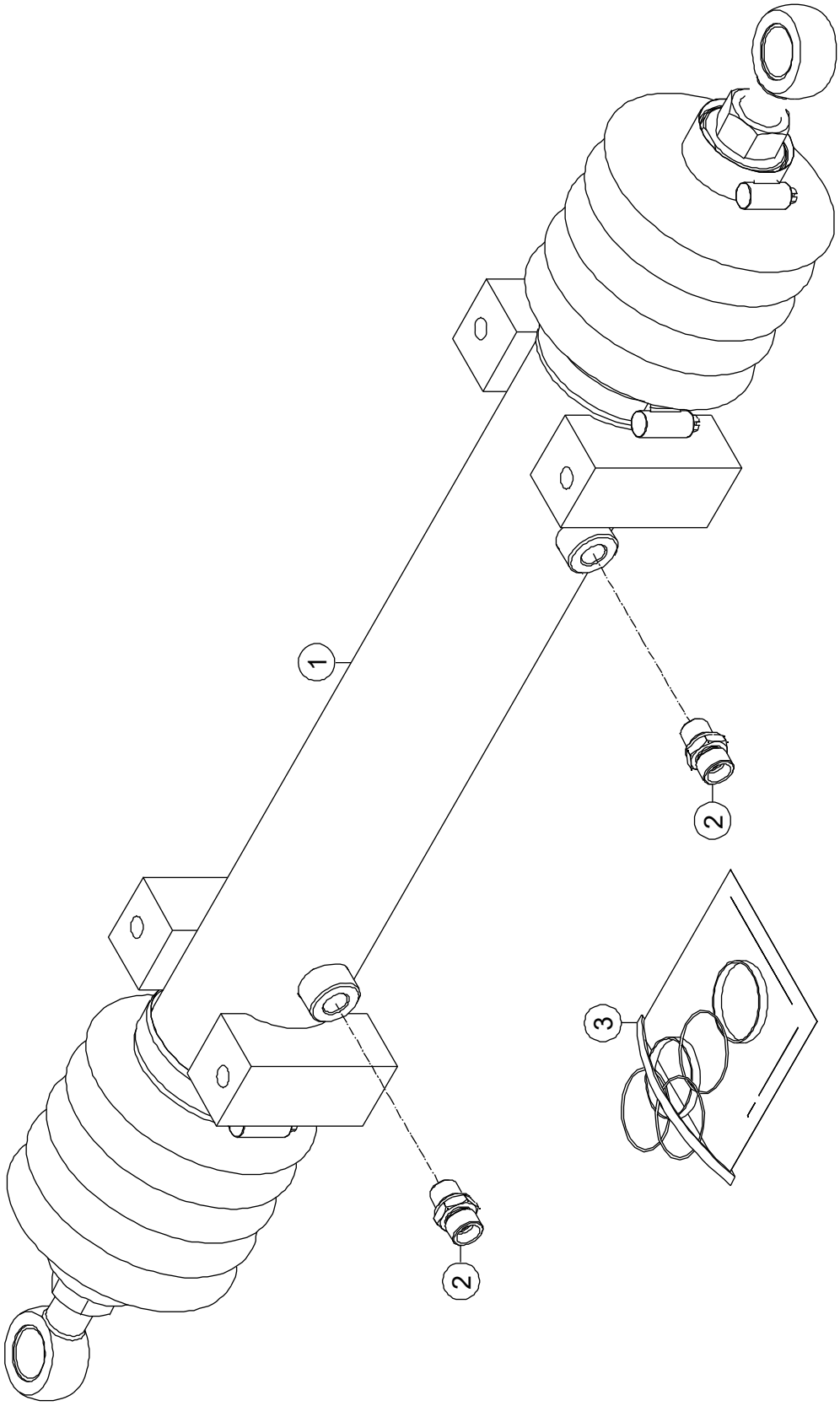

5-1 Steer Cylinder Assembly

Item	Part Number	Description	Qty.	Remark
1	50000098	Steer Cylinder Assembly	1	
2	00001290	Fitting, Straight	2	
3	50003488	Seal Kit 63/45	1	

5-2 Lower Lifting Cylinder Assembly

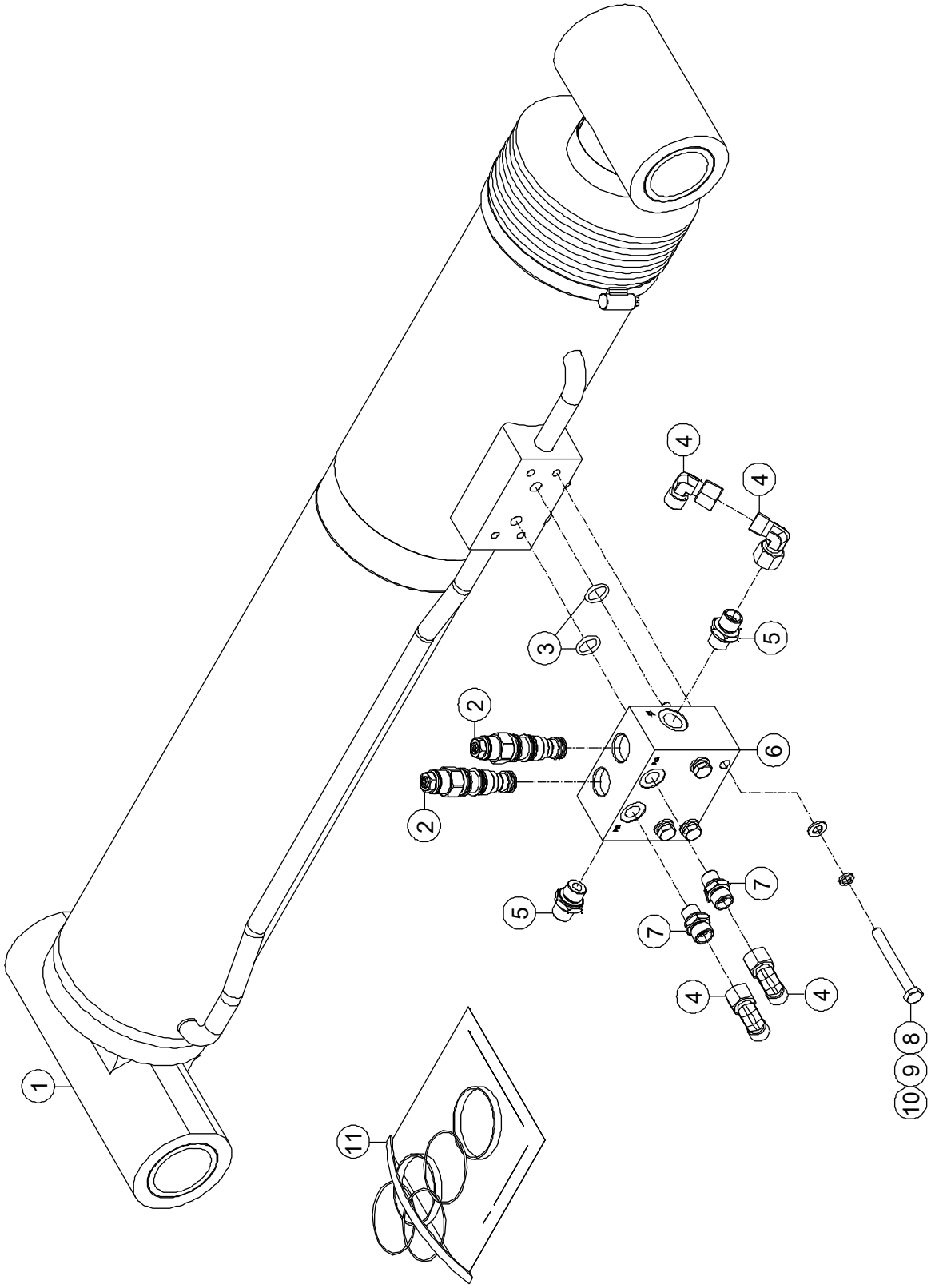

5-2 Lower Lifting Cylinder Assembly

Item	Part Number	Description	Qty.	Remark
1	50000004	Lower Lifting Cylinder Assembly	1	
2	00003435	Cartridge, Valve (Counterbalance)	2	
3	00001709	O-Ring	2	
4	00001833	Fitting, 90°	4	
5	00001291	Fitting, Straight	2	
6	00003849	Body	1	
7	00001290	Fitting, Straight	2	
8	00001860	Bolt GB/T 5782 M8 × 70	4	
9	00000609	Spring Washer GB/T 93 8	4	
10	00000608	Flat Washer GB/T 97.1 8	4	
11	50003344	Seal Kit 125/70	1	

5-3 Mid Lifting Cylinder Assembly

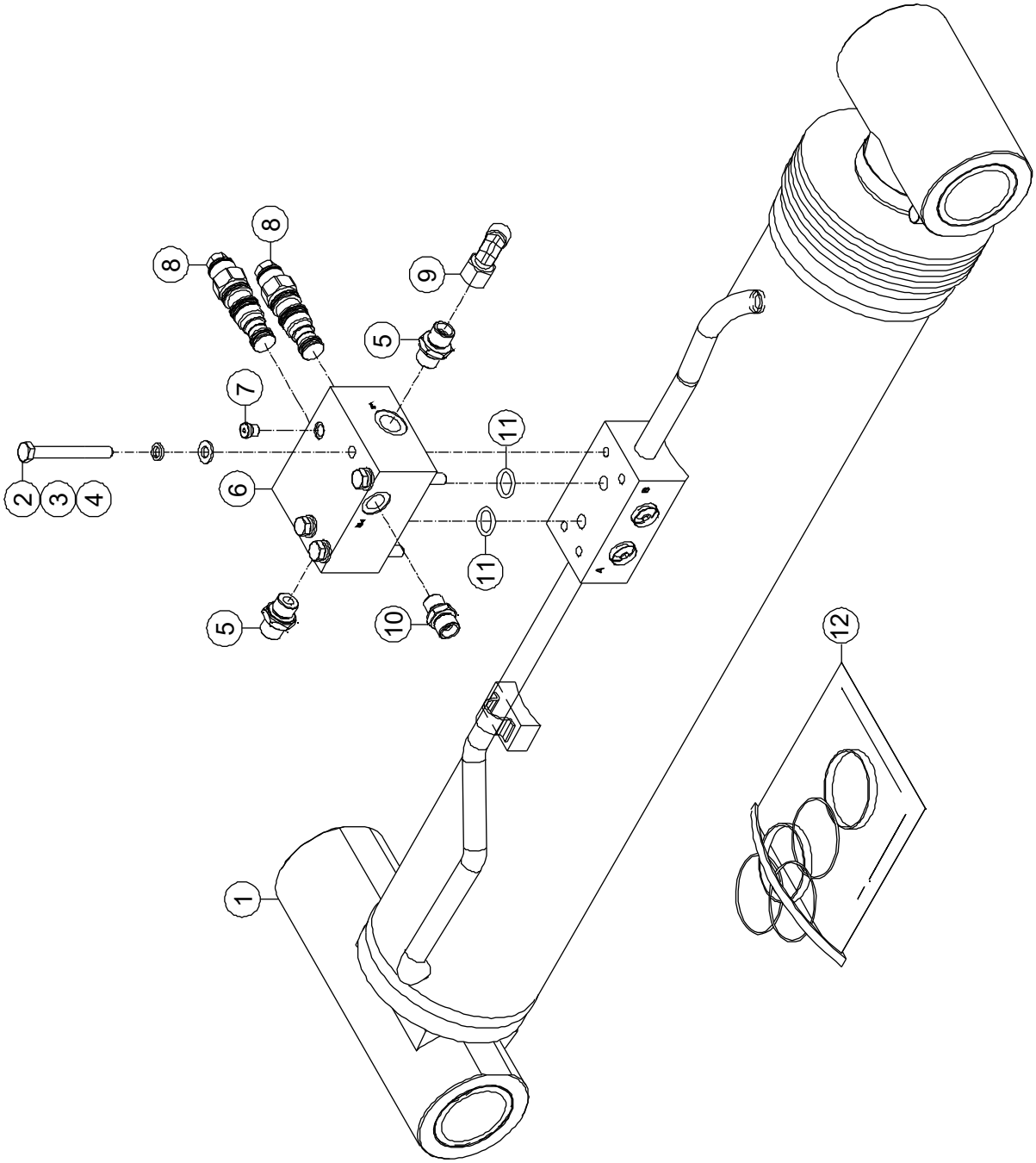

5-3 Mid Lifting Cylinder Assembly

Item	Part Number	Description	Qty.	Remark
1	50000005	Mid Lifting Cylinder Assembly	1	
2	00001860	Bolt GB/T 5782 M8 × 70	4	
3	00000609	Spring Washer GB/T 93 8	4	
4	00000608	Flat Washer GB/T 97.1 8	4	
5	00001291	Fitting, Straight	2	
6	00003852	Body	1	
7	00002999	Plug	1	
8	00003435	Cartridge, Valve (Counterbalance)	2	
9	00001833	Fitting, 90°	1	
10	00001290	Fitting, Straight	1	
11	00001709	O-Ring	2	
12	50003438	Seal Kit 110/63	1	

5-4 Telescope Cylinder Assembly

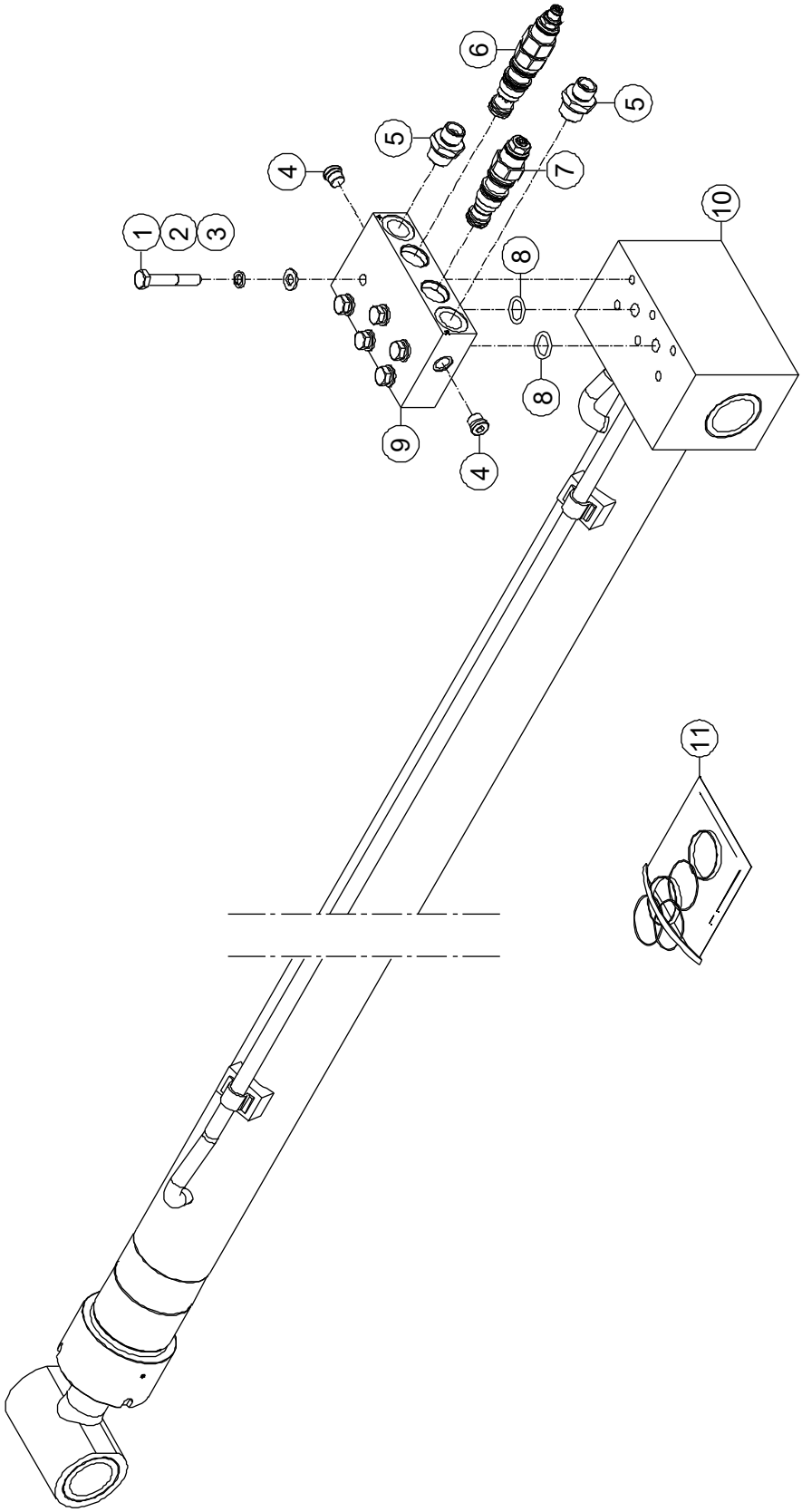

5-4 Telescope Cylinder Assembly

Item	Part Number	Description	Qty.	Remark
1	00002089	Bolt GB/T 5782 M8 × 50	6	
2	00000609	Spring Washer GB/T 93 8	6	
3	00000608	Flat Washer GB/T 97.1 8	6	
4	00002998	Plug	2	
5	00001292	Fitting, Straight	2	
6	00003432	Cartridge, Valve (Counterbalance)	1	
7	00003435	Cartridge, Valve (Counterbalance)	1	
8	00001709	O-Ring	2	
9	00003431	Body	1	
10	50000007	Telescope Cylinder Assembly	1	BA16NE
	50000012	Telescope Cylinder Assembly	1	BA18NE
11	50003375	Seal Kit 50/32	1	

5-5 Upper Lifting Cylinder Assembly

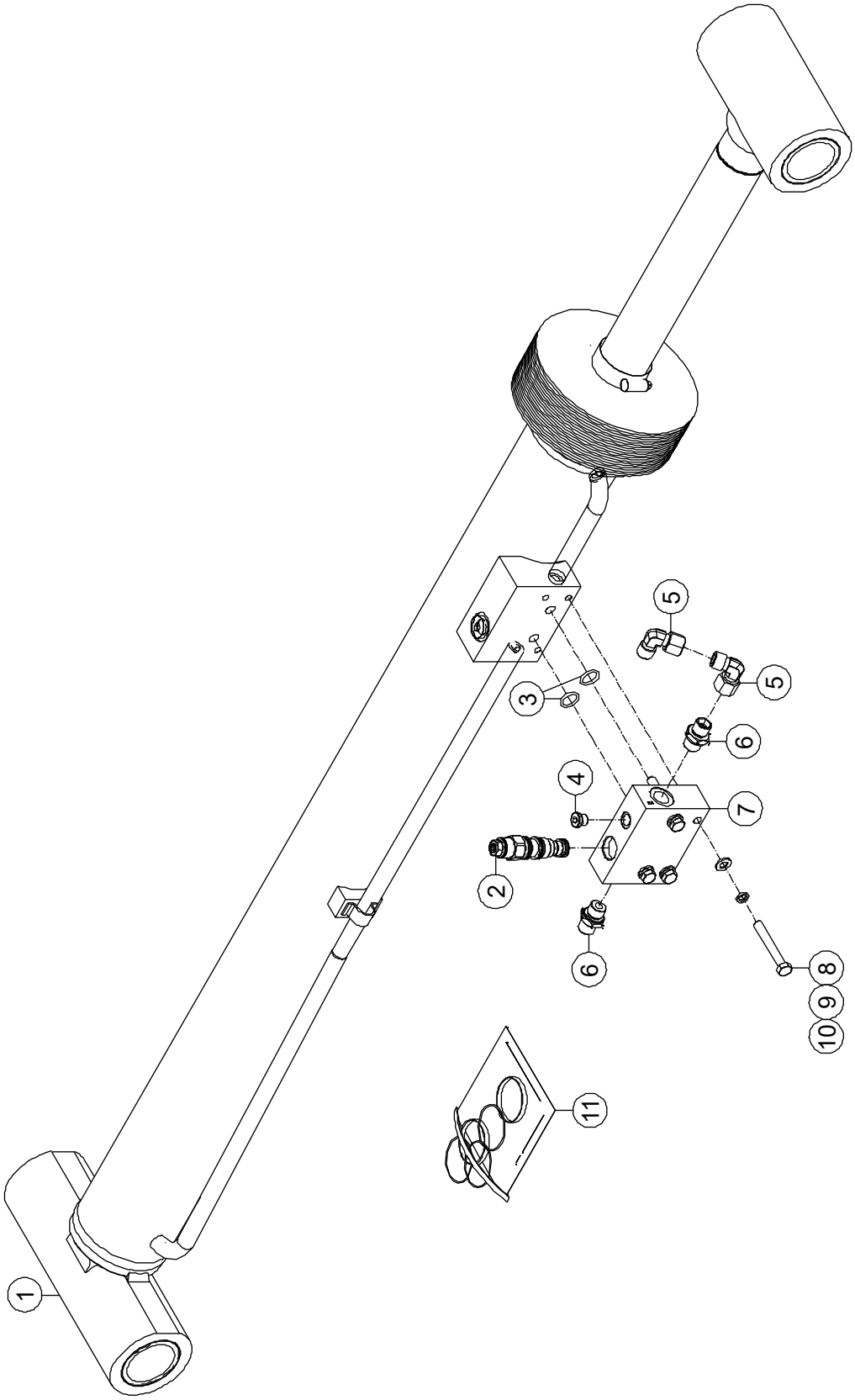

5-5 Upper Lifting Cylinder Assembly

Item	Part Number	Description	Qty.	Remark
1	50000006	Upper Lifting Cylinder Assembly	1	
2	00003435	Cartridge, Valve (Counterbalance)	1	
3	00001709	O-Ring	2	
4	00002998	Plug	1	
5	00001833	Fitting, 90°	2	
6	00001291	Fitting, Straight	2	
7	00003854	Body	1	
8	00001851	Bolt GB/T 5783 M8 × 60	4	
9	00000609	Spring Washer GB/T 93 8	4	
10	00000608	Flat Washer GB/T 97.1 8	4	
11	50003523	Seal Kit 80/50	1	

5-6 Master Cylinder Assembly

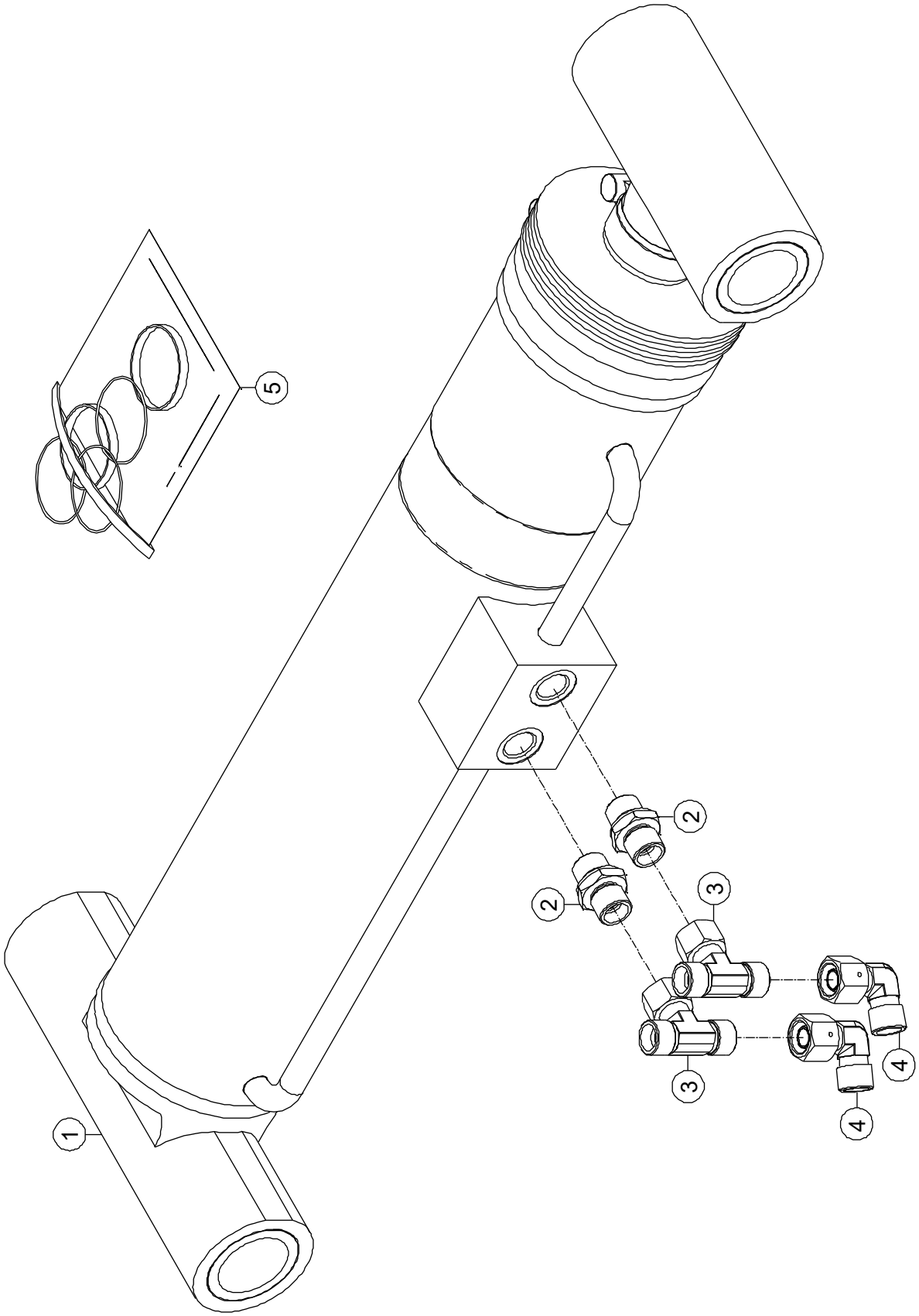

5-6 Master Cylinder Assembly

Item	Part Number	Description	Qty.	Remark
1	50000009	Master Cylinder Assembly	1	
2	00001291	Fitting, Straight	2	
3	00002119	Fitting, Tee	2	
4	00001833	Fitting, 90°	2	
5	50003515	Seal Kit 80/40	1	

5-7 Slave Cylinder Assembly

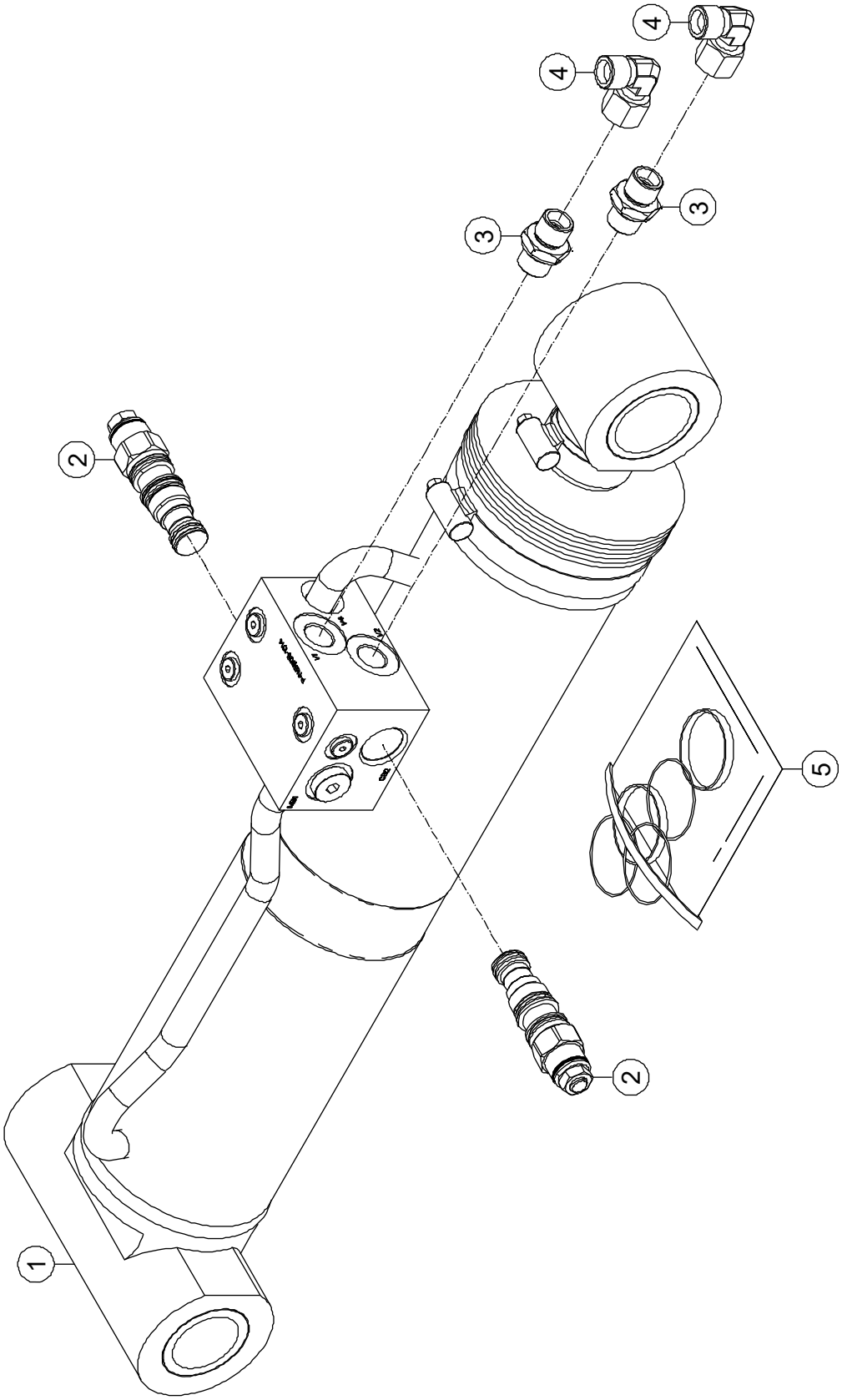

5-7 Slave Cylinder Assembly

Item	Part Number	Description	Qty.	Remark
1	50000008	Slave Cylinder Assembly	1	
2	00004587	Cartridge, Valve (Counterbalance)	2	
3	00001291	Fitting, Straight	2	
4	00001833	Fitting, 90°	2	
5	50003132	Seal Kit 80/40	1	

5-8 Jib Cylinder Assembly

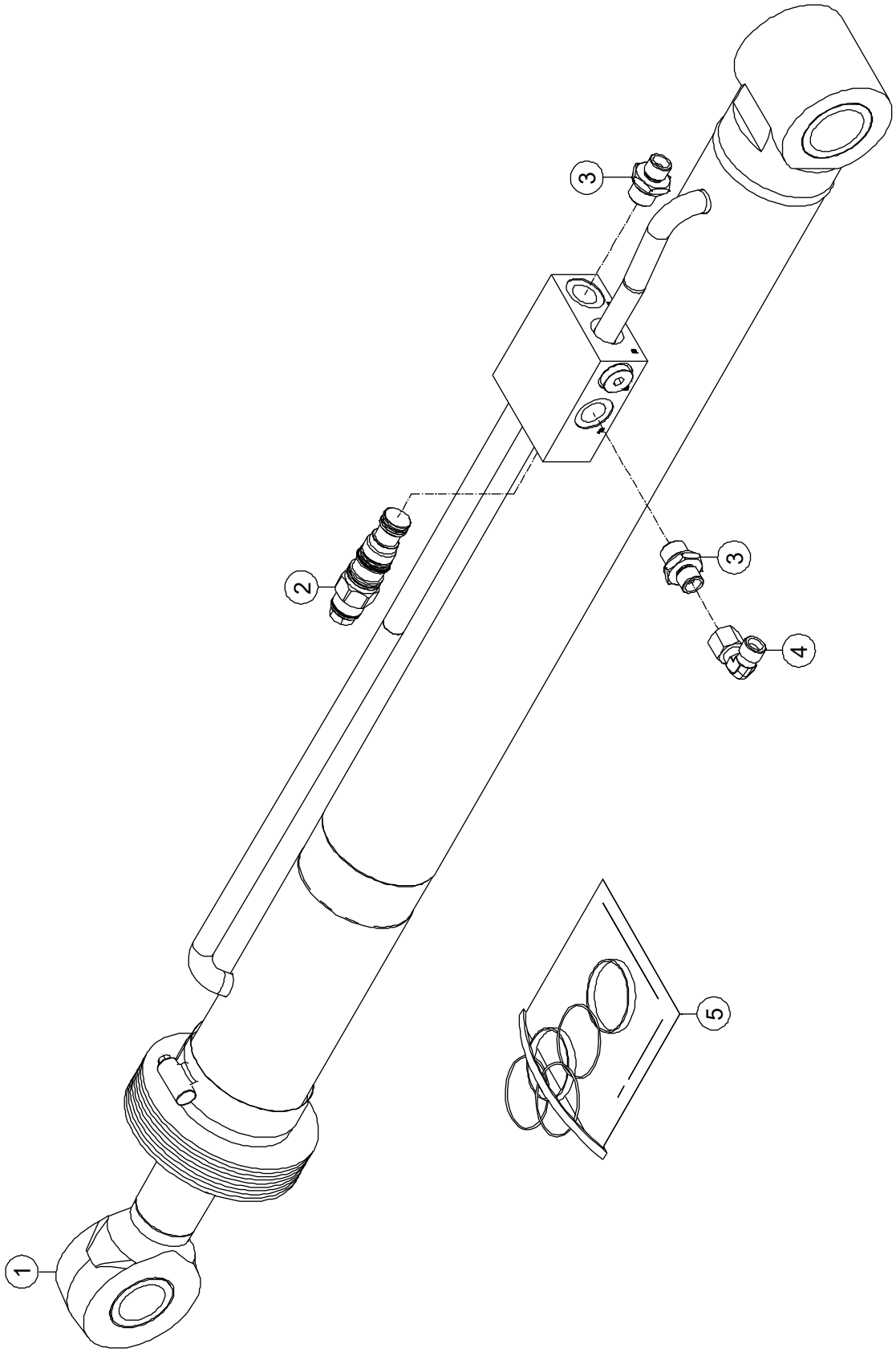

5-8 Jib Cylinder Assembly

Item	Part Number	Description	Qty.	Remark
1	50000010	Jib Cylinder Assembly	1	
2	00003419	Cartridge, Valve (Counterbalance)	1	
3	00002921	Fitting, Straight	2	
4	00001832	Fitting, 90°	1	
5	50003502	Seal Kit 63/40	1	

Section 6
Hydraulic System

6-1 Suction-Return System

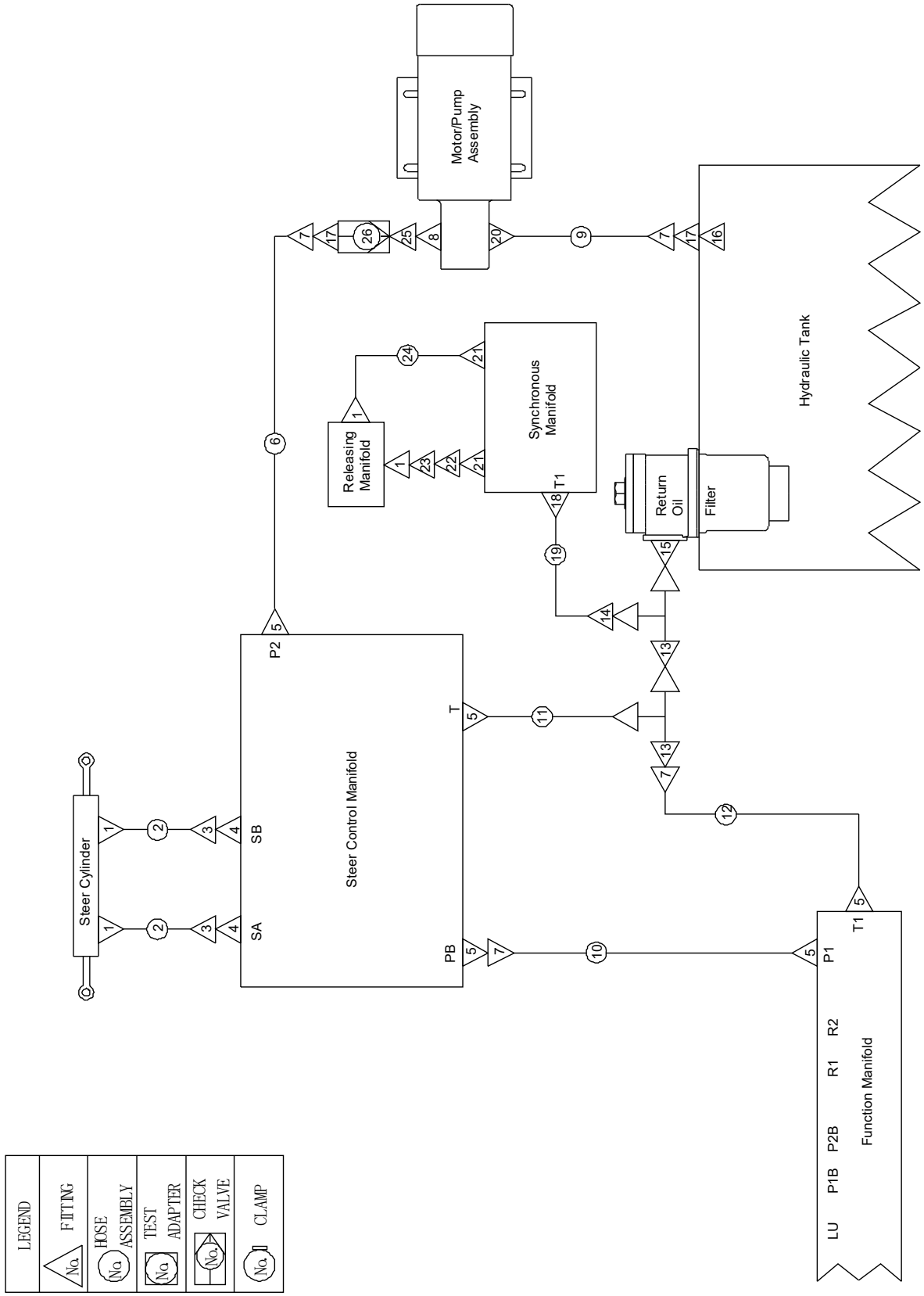

6-1 Suction-Return System

Item	Part Number	Description	Qty.	Remark
1	00001290	Fitting, Straight	4	
2	50003629	Hose Assembly	2	
3	00001832	Fitting, 90°	2	
4	00002921	Fitting, Straight	2	
5	00001266	Fitting, Straight	5	
6	50003626	Hose Assembly	1	
7	00001835	Fitting, 90°	4	
8	00001776	Fitting, Straight	1	
9	50005489	Hose Assembly	1	
10	50003634	Hose Assembly	1	
11	50003627	Hose Assembly	1	
12	50003635	Hose Assembly	1	
13	00001240	Fitting, Tee	2	
14	00003583	Fitting, Straight	1	
15	00002945	Fitting, Straight	1	
16	00000518	Strainer, Suction	1	
17	00001264	Fitting, Straight	2	
18	00001294	Fitting, Straight	1	
19	50003636	Hose Assembly	1	
20	00001779	Fitting, Straight	1	
21	00001291	Fitting, Straight	2	
22	00001833	Fitting, 90°	1	
23	00005565	Fitting, Straight	1	
24	92048876	Hose Assembly	1	
25	00005611	Fitting, Straight	1	
26	00003864	Check Valve	1	

6-2 Functional Hydraulic Circuit

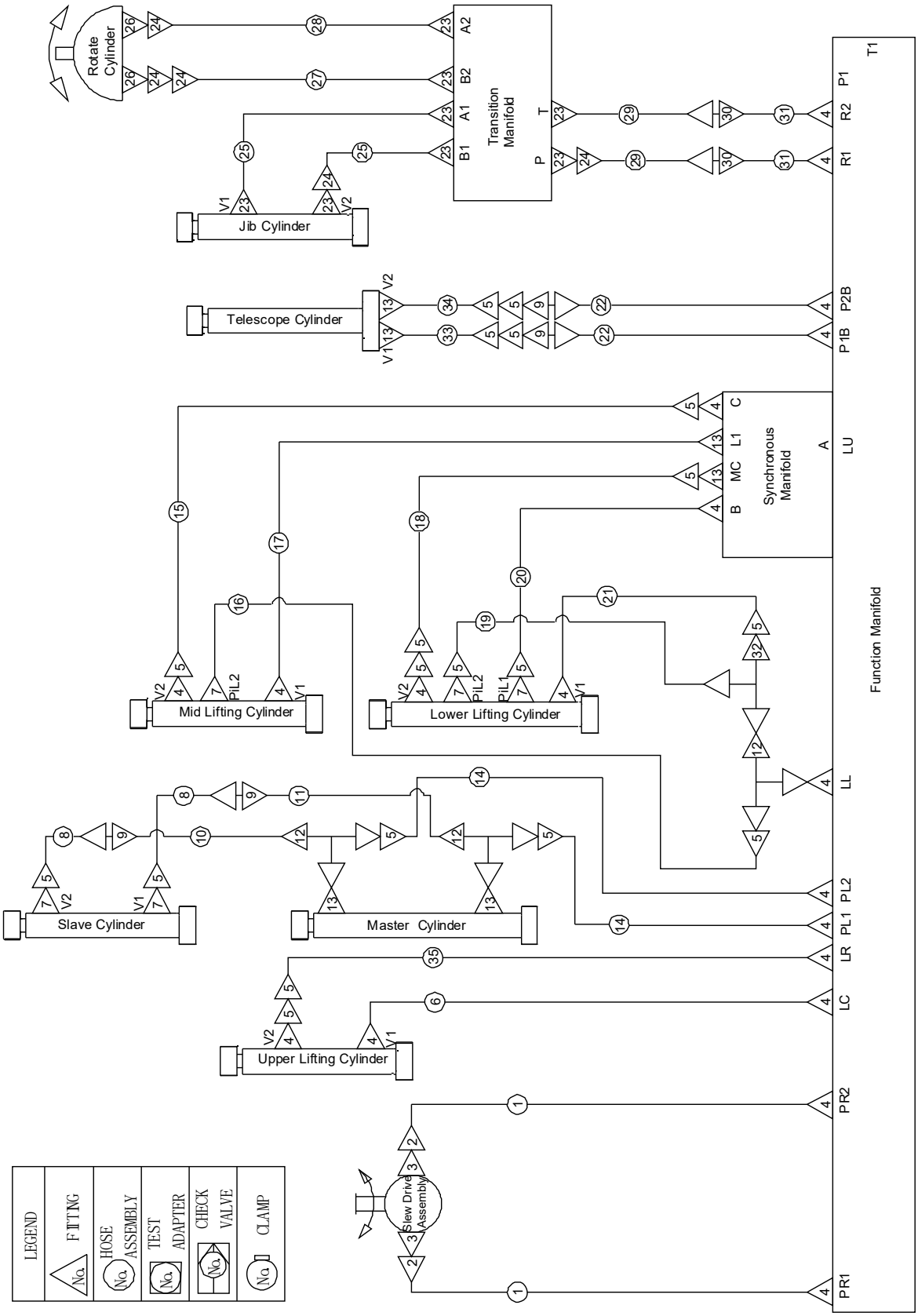

6-2 Functional Hydraulic Circuit

Item	Part Number	Description	Qty.	Remark
1	50003637	Hose Assembly	2	
2	00001834	Fitting, 90°	2	
3	00001774	Fitting, Straight	2	
4	00001291	Fitting, Straight	19	
5	00001833	Fitting, 90°	18	
6	50007550	Hose Assembly	1	BA16NE
	50007561	Hose Assembly	1	BA18NE
7	00001290	Fitting, Straight	5	
8	50007556	Hose Assembly	2	BA16NE
	50007563	Hose Assembly	2	BA18NE
9	00002136	Fitting, Straight	4	
10	50003656	Hose Assembly	1	
11	50003655	Hose Assembly	1	
12	00002119	Fitting, Tee	3	
13	00001292	Fitting, Straight	6	
14	50007548	Hose Assembly	2	BA16NE
	50007559	Hose Assembly	2	BA18NE
15	50003657	Hose Assembly	1	BA16NE
	50004907	Hose Assembly	1	BA18NE
16	50007554	Hose Assembly	1	BA16NE
	50004908	Hose Assembly	1	BA18NE
17	50007553	Hose Assembly	1	BA16NE
	50004906	Hose Assembly	1	BA18NE
18	50003640	Hose Assembly	1	
19	50003641	Hose Assembly	1	
20	50003642	Hose Assembly	1	
21	50003639	Hose Assembly	1	
22	50007552	Hose Assembly	2	BA16NE
	50005799	Hose Assembly	2	BA18NE

6-2 Functional Hydraulic Circuit (Continued)

Item	Part Number	Description	Qty.	Remark
23	00002921	Fitting, Straight	7	
24	00001832	Fitting, 90°	5	
25	50004024	Hose Assembly	2	
26	00001769	Fitting, Straight	2	
27	50003980	Hose Assembly	1	
28	50003900	Hose Assembly	1	
29	50003574	Hose Assembly	1	BA16NE
	50004902	Hose Assembly	1	BA18NE
30	00002135	Fitting, Straight	2	
31	50007549	Hose Assembly	2	BA16NE
	50007560	Hose Assembly	2	BA18NE
32	00001238	Fitting, Tee	1	
33	50005780	Steel Tube	1	
34	50005781	Steel Tube	1	
35	50007551	Hose Assembly	1	BA16NE
	50004898	Hose Assembly	1	BA18NE

Section 7
Electrical System

7-1 Electrical Harness (Lithium Battery)

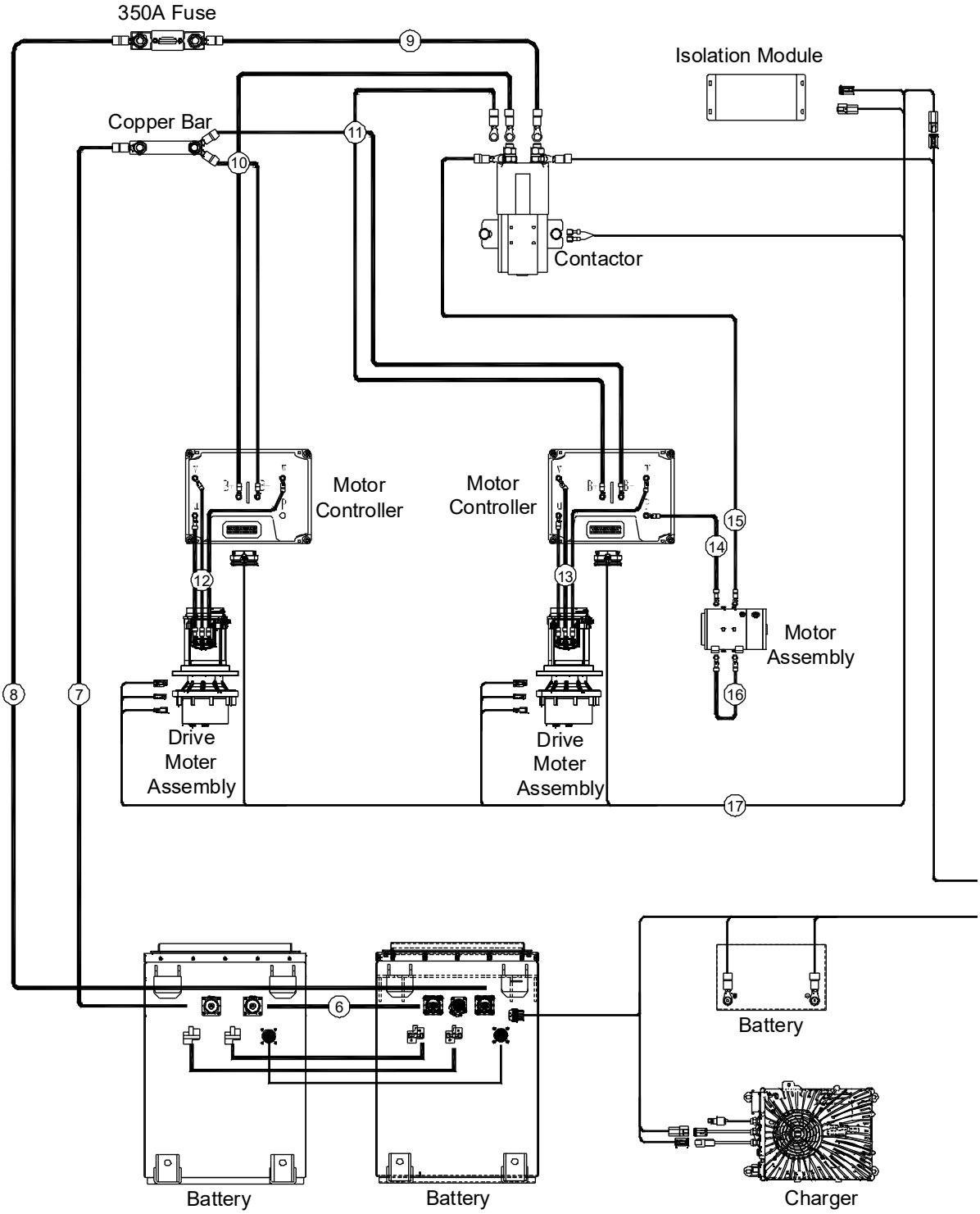

7-1 Electrical Harness (Lithium Battery) (Continued)

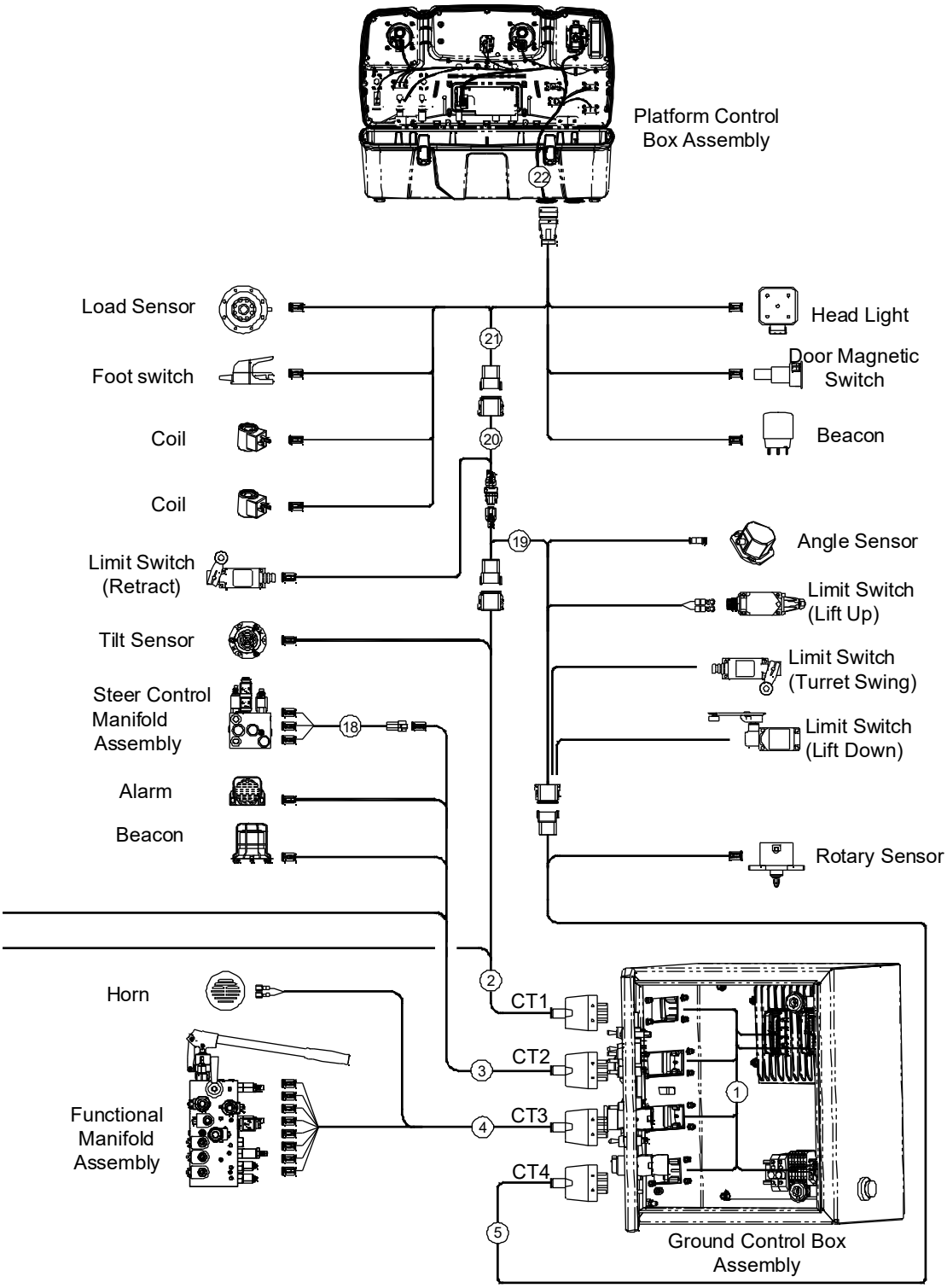

7-1 Electrical Harness (Lithium Battery)

Item	Part Number	Description	Qty.	Remark
1	00009998	Ground Control Box Harness	1	
2	00009757	CT1 Harness	1	
3	00009758	CT2 Harness	1	
4	00009759	CT3 Harness	1	
5	00009766	CT4 Harness	1	
6	00009767	Battery Harness	1	
7	00009769	Battery Negative Harness	1	
8	00009768	Battery Positive Harness	1	
9	00004790	Contactor Harness	1	
10	00004791	Drive Controller Power Harness1	1	
11	00004792	Drive Controller Power Harness 2	1	
12	00004795	Drive Motor Harness 1	1	
13	00005170	Drive Motor Harness 2	1	
14	00004794	Pump Motor Negative Harness	1	
15	00004793	Pump Motor Positive Harness	1	
16	00005469	Pump Motor Connect Harness	1	
17	00009761	Drive Controller Harness	1	
18	00009762	Steer Valve Harness	1	
19	00008066	Boom harness 1	1	
20	00009765	Boom harness 2	1	
21	00009764	Platform Harness	1	
22	00009763	Platform Control Box Harness	1	

7-2 Ground Control Box Assembly

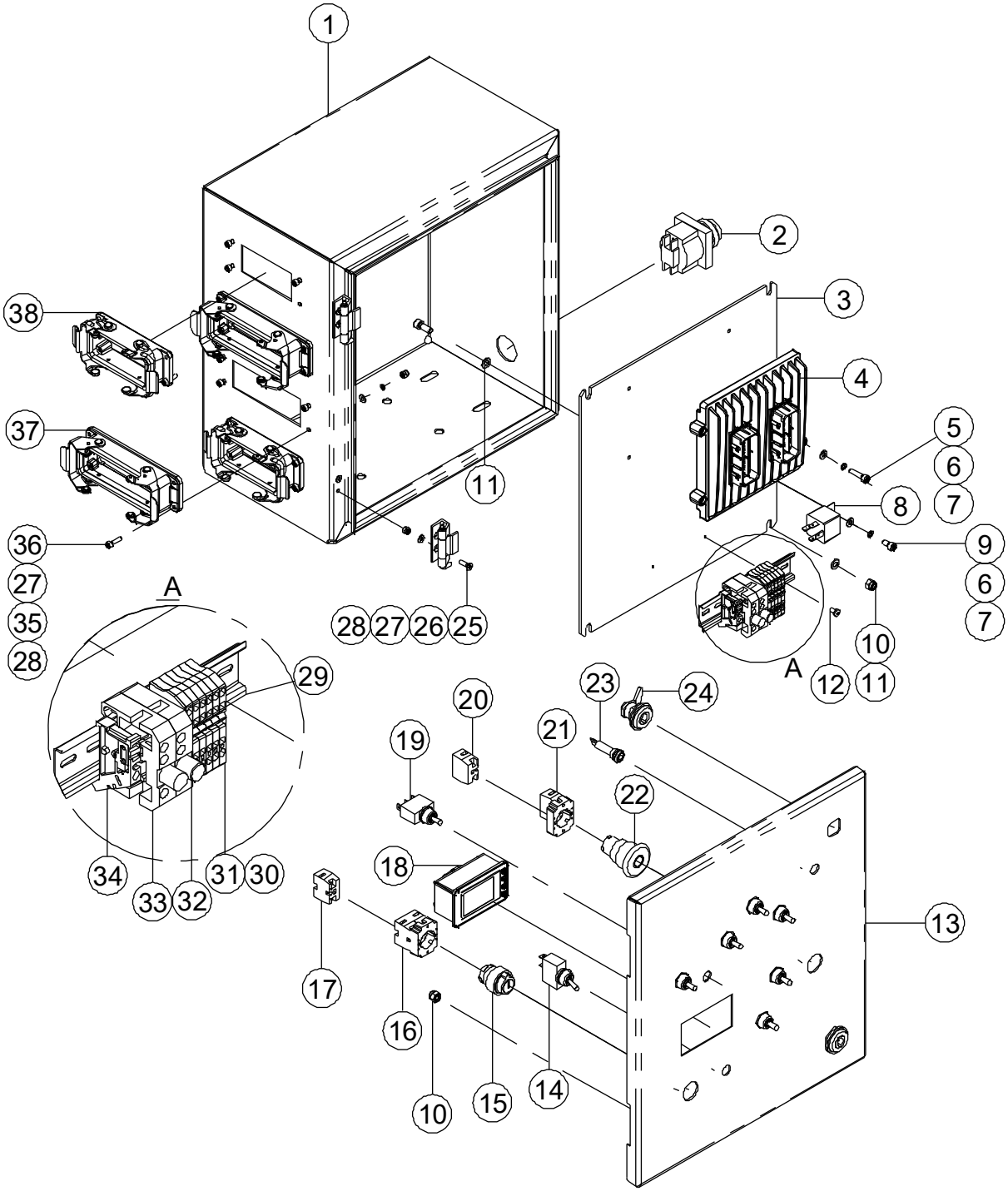

7-2 Ground Control Box Assembly

Item	Part Number	Description	Qty.	Remark
1	50007422	Box	1	
2	00000665	Alarm	1	
3	50007421	Plate, Bracket	1	
4	00008699	Controller	1	
5	00000817	Screw GB/T 70 M5 × 20	4	
6	00000606	Spring Washer GB/T 93 5	7	
7	00000605	Flat Washer GB/T 97.1 5	7	
8	00002206	Relay	3	
9	00001030	Screw GB/T 70 M5 × 10	3	
10	00001033	Nut GB/T 6182 M6	6	
11	00000620	Flat Washer GB/T 97.1 6	8	
12	00002333	Screw GB/T 818 M4 × 8 - H	2	
13	50007419	Electric Control Box Cover	1	
14	00001855	Switch, Toggle	1	
15	00000753	Key switch Head	1	
16	00000755	Base With 1 NO Contact	1	
17	00002052	NO Contact	1	
18	00008262	Display	1	
19	00000654	Switch, Toggle	7	
20	00001245	NC Contact	1	
21	00000752	Base With 1 NC Contact	1	
22	00000754	Red Mushroom Head	1	
23	00006557	Indicator	1	
24	00001296	Lock, Column	2	
25	00005259	Screw GB/T 819 M4 × 14 - H	4	
26	50000217	Rack, Gemel	2	
27	00000778	Flat Washer GB/T 97.1 4	20	
28	00001236	Nut GB/T 889.1 M4	20	
29	10004977	Bracket	1	

7-2 Ground Control Box Assembly (Continued)

Item	Part Number	Description	Qty.	Remark
30	00002593	End, Plate	1	
31	00000659	End, Straight	6	
32	00007804	Fuse 15A	1	
33	00000661	End, Fuse	2	
34	00000660	End, Fixation	2	
35	00000779	Spring Washer GB/T 93 4	16	
36	00000604	Screw GB/T 70.1 M4×16	16	
37	00000732	Housing	2	
38	00002719	Housing	2	

7-3 Platform Control Box Assembly

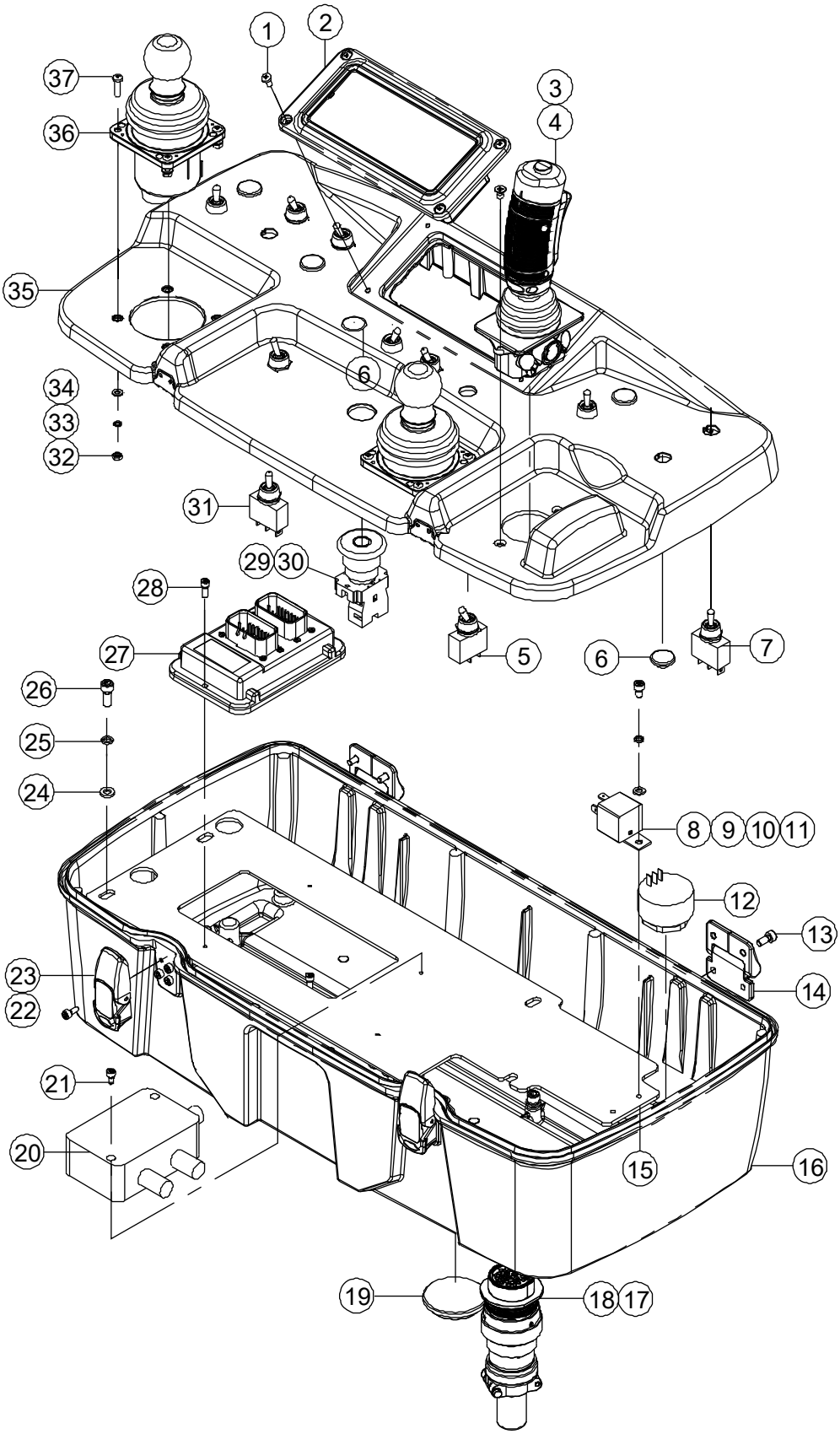

7-3 Platform Control Box Assembly

Item	Part Number	Description	Qty.	Remark
1	00002333	Screw GB/T 818 M4 × 8 - H	4	
2	00005395	LED Panel	1	
3	00005459	Screw GB/T 819 M5 × 8 - H	2	
4	00005393	Joystick (Steer &Drive)	1	
5	00006134	Switch, Toggle	6	
6	00000667	Plug, Toggle Switch	5	
7	00005401	Switch, Toggle	1	
8	00002206	Relay	2	
9	00000605	Flat Washer GB/T 97.1 5	2	
10	00000606	Spring Washer GB/T 93 5	2	
11	00005240	Screw GB/T 70 M5 × 8	2	
12	00002326	Alarm	1	
13	00001252	Screw GB/T 70 M5 × 12	8	
14	00005391	Hinge	2	
15	50007522	Bracket	1	
16	92000092	Platform control box	1	
17	00005398	Housing for male terminals	1	
18	00005396	Housing for female terminals	1	
19	50005443	Plug, Contactor	1	
20	00003164	Load Sensor Amplifier	1	
21	00001987	Screw GB/T 70 M4 × 8	2	
22	00002002	Screw GB/T 70 M4 × 10	8	
23	00005392	Latch	2	
24	00000620	Flat Washer GB/T 97.1 6	4	
25	00000621	Spring Washer GB/T 93 6	4	
26	00000876	Screw GB/T 70 M6 × 16	4	
27	00009830	Controller	1	
28	00001054	Screw GB/T 70 M4 × 12	2	
29	00000754	Red Mushroom Head	1	

7-3 Platform Control Box Assembly (Continued)

Item	Part Number	Description	Qty.	Remark
30	00000752	Base With 1 NC Contact	1	
31	00006135	Switch, Toggle	3	
32	00002712	Nut GB/T 6170 M4	8	
33	00000779	Spring Washer GB/T 93 4	8	
34	00000778	Flat Washer GB/T 97.1 4	8	
35	92000093	Cover, Platform Control Box	1	
36	00005394	Joystick	2	
37	00001232	Screw GB/T 818 M4 × 16 - H	8	

Section 8
Decals

8-1 Decals with Words

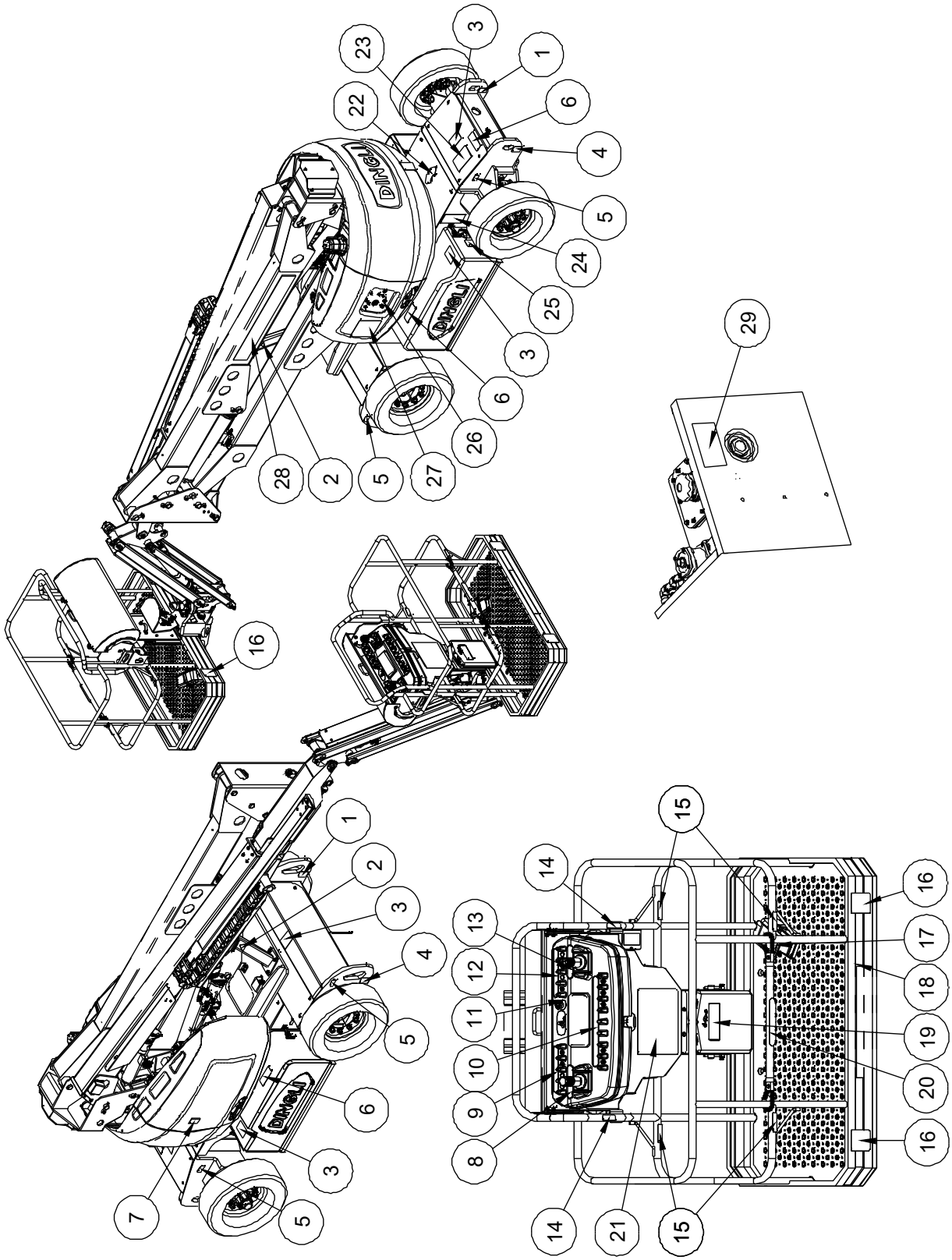

8-1 Decals with Words

Item	Part Number	Description	Qty.	Remark
1	09310049	Decal, Instructions-Lift point	4	
2	09410118	Decal, Symbols-Hand crushing hazard	2	
3	09410031	Decal, Warning-Do not stepping	4	
4	09310050	Decal, Instructions-Tie down point	4	
5	09310203	Decal, Instructions-Maximum wheel load 3470kg	4	BA16NE
	09310199	Decal, Instructions-Maximum wheel load 3830kg	4	BA18NE
6	09410032	Decal, Warning-Explosion/fire hazard	3	
7	09420007	Decal, Warning-Prohibit unauthorized operation	1	
8	09140009	Decal, Platform control panel	1	
9	09140007	Decal, Platform control panel	1	
10	09140011	Decal, Platform control panel	1	
11	09140012	Decal, Emergency stop panel	1	
12	09140008	Decal, Platform control panel	1	
13	09140010	Decal, Platform control panel	1	
14	09340070	Decal, Symbols-Non operating hand position	2	
15	09440059	Decal, Label-Lanyard anchorage point	4	
16	09420005	Decal, Warning-Crushing hazard	5	
17	09440057	Decal, Warning-Footswitch	1	
18	09440055	Decal, Label-Capacity 230kg	1	
19	09340001	Decal, Notice-Keep the manual with the machine	1	
20	09340016	Decal, Instructions-Open/close	1	
21	09440061	Decal, Danger-General safety rules	1	
22	09310051	Decal, Instructions-Directional arrows	2	
23	09310056	Decal, Notice-Battery charging instructions	1	
24	09210006	Nameplate, Manufacturer serial number	1	
25	09310006	Decal, Notice-Main power switch operation	1	

8-1 Decals with Words (Continued)

Item	Part Number	Description	Qty.	Remark
26	09120014	Decal, Ground control panel	1	
27	09410034	Decal, Warning-Electrocution hazard	1	
28	09630090	Decal, Label-BA16NE	1	BA16NE
	09630089	Decal, Label-BA18NE	1	BA18NE
29	09310240	Decal, Notice-Check the hydraulic oil level	1	

8-1 Decals with Words (Continued)

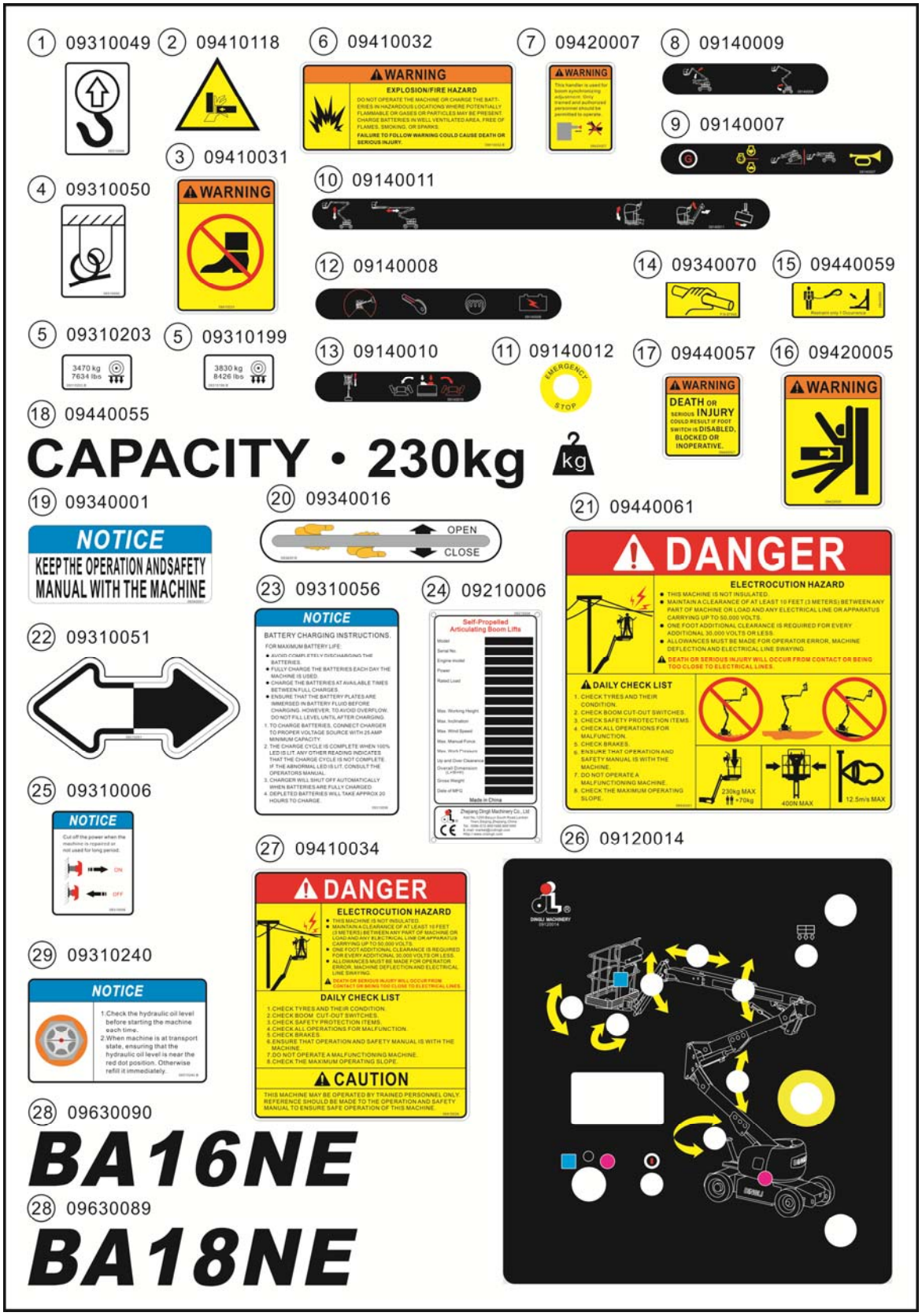

8-2 Decals with Symbols

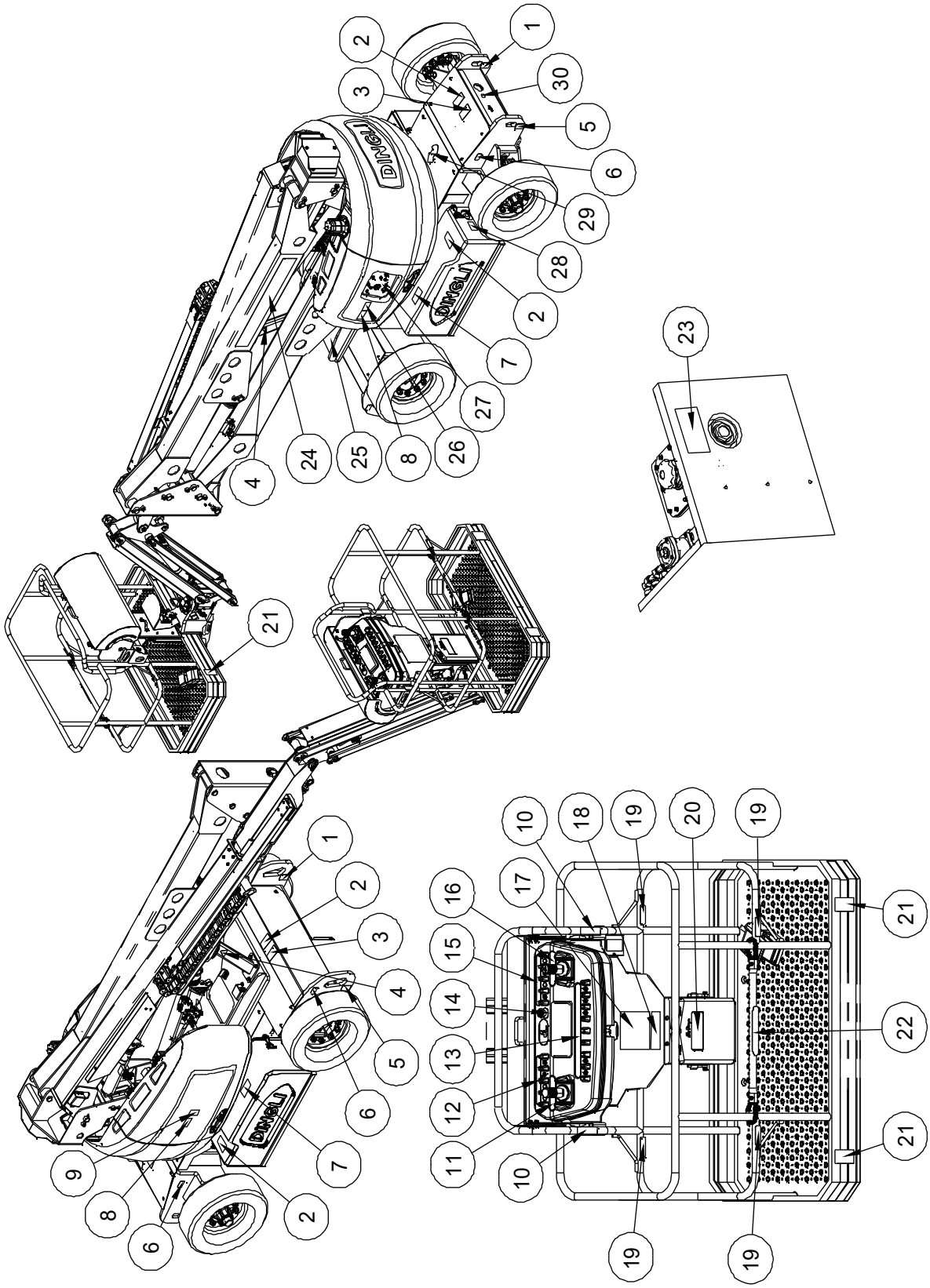

8-2 Decals with Symbols

Item	Part Number	Description	Qty.	Remark
1	09310049	Decal, Instructions-Lift point	4	
2	09410052	Decal, Symbols-Do not stepping	4	
3	09420016	Decal, Symbols-Crushing hazard	2	
4	09410118	Decal, Symbols-Hand crushing hazard	2	
5	09310050	Decal, Instructions-Tie down point	4	
6	09310203	Decal, Instructions-Maximum wheel load 3470kg	4	BA16NE
	09310199	Decal, Instructions-Maximum wheel load 3830kg	4	BA18NE
7	09410048	Decal, Symbols-Explosion/burn hazard	3	
8	09410079	Decal, Symbols-Electrocution hazard	2	
9	09410050	Decal, Symbols-Injection hazard	1	
10	09340070	Decal, Symbols-Non operating hand position	2	
11	09140009	Decal, Platform control panel	1	
12	09140007	Decal, Platform control panel	1	
13	09140011	Decal, Platform control panel	1	
14	09140012	Decal, Emergency stop panel	1	
15	09140008	Decal, Platform control panel	1	
16	09140010	Decal, Platform control panel	1	
17	09440145	Decal, Symbols-General safety rules	1	
18	09440146	Decal, Label-Capacity 230kg	1	
19	09340041	Decal, Label-Lanyard anchorage point	4	
20	09340001	Decal, Notice-Keep the manual with the machine	1	
21	09410043	Decal, Symbols-Collision hazard	4	
22	09340029	Decal, Instructions-Open/close	1	
23	09310367	Decal, Notice-Check the hydraulic oil level	1	
24	09630090	Decal, Label- BA16NE	1	BA16NE
	09630089	Decal, Label- BA18NE	1	BA18NE

8-2 Decals with Symbols (Continued)

Item	Part Number	Description	Qty.	Remark
25	09310098	Decal, Symbols-Platform power instructions	1	
26	09340026	Decal, Symbols-Refer the operator to the instructions for use	1	
27	09120014	Decal, Ground control panel	1	
28	09310078	Decal, Symbols-Main power switch operation	1	
29	09310051	Decal, Instructions-Directional arrows	2	
30	09310355	Decal, Symbols-Battery charging instructions	1	

8-2 Decals with Symbols (Continued)

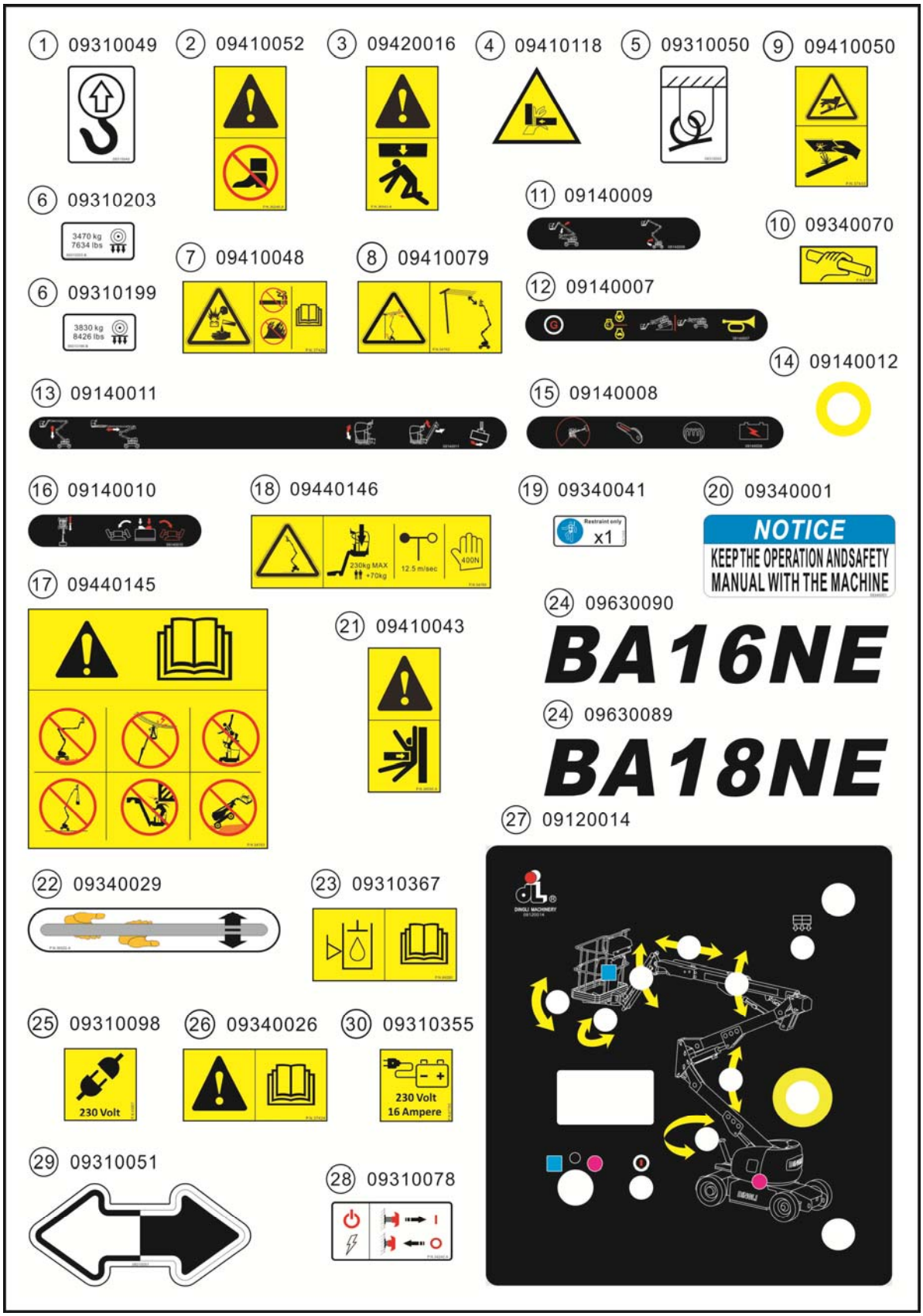

Section 9
Special Options

9-1 Battery Installations

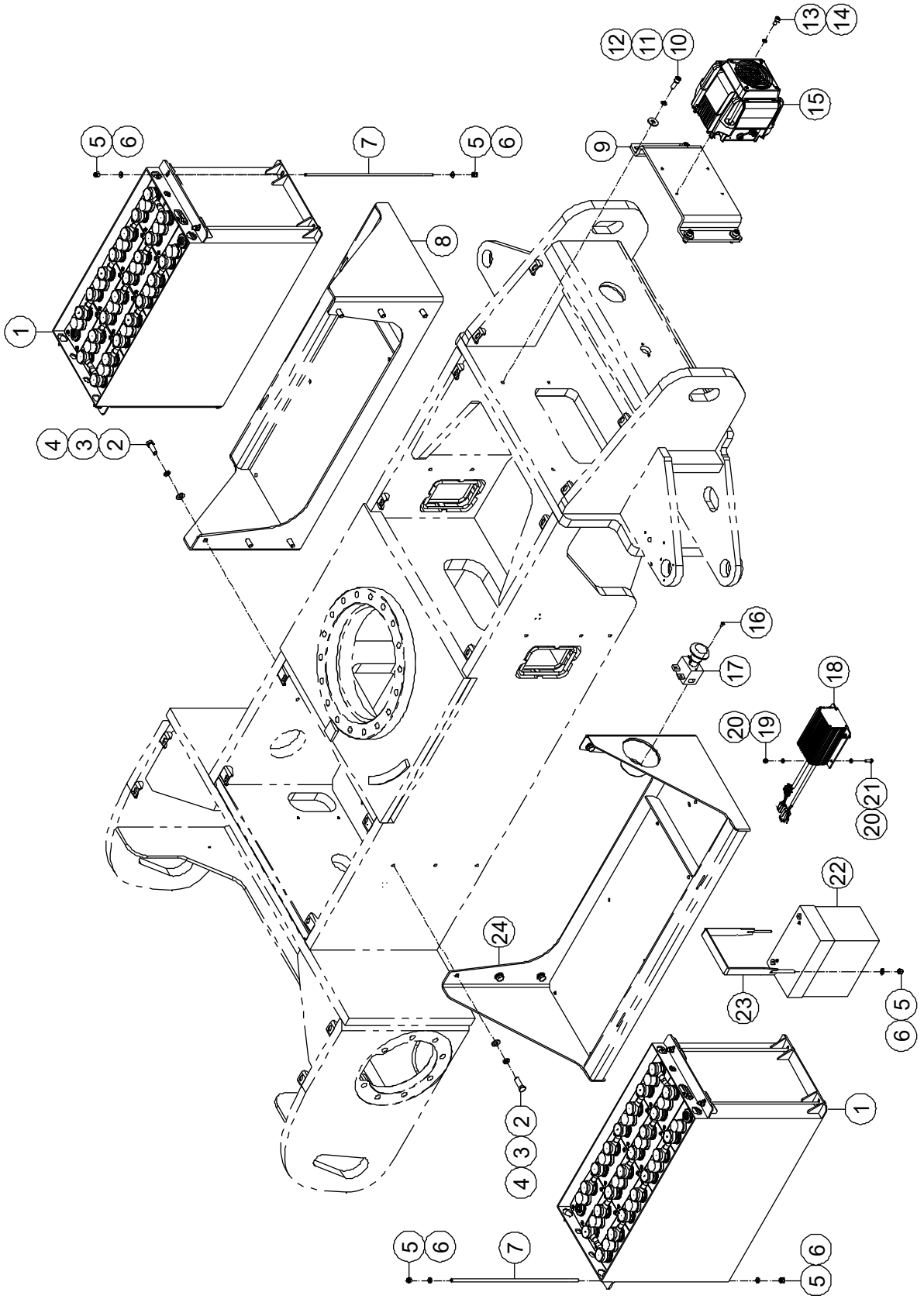

9-1 Battery Installations

Item	Part Number	Description	Qty.	Remark
1	00007738	Battery	2	
2	00002046	Bolt GB/T 5783 M12 × 35	12	
3	00000815	Spring Washer GB/T 93 12	12	
4	00000814	Flat Washer GB/T 97.1 12	12	
5	00001163	Nut GB/T 6182 M8	18	
6	00000608	Flat Washer GB/T 97.1 8	18	
7	50000888	Rod, Hold-Down	8	
8	50000881	Box, Battery	1	
9	50000980	Bracket	1	
10	00001059	Screw GB/T 70 M10 × 30	4	
11	00000679	Spring Washer GB/T 93 10	4	
12	00001028	Flat Washer GB/T 96.1 10	4	
13	00002051	Screw GB/T 70 M8 × 16	4	
14	00000609	Spring Washer GB/T 93 8	4	
15	00000636	Charger	1	
16	00002319	Screw GB/T 818 M5 × 10 - H	2	
17	00000655	Power Switch	1	
18	00007381	Dc Power Supply	1	
19	00001033	Nut GB/T 6182 M6	4	
20	00000620	Flat Washer GB/T 97.1 6	8	
21	00000743	Bolt GB/T 5783 M6 × 20	4	
22	00004882	Battery	1	
23	50007427	Plate	1	
24	50007425	Box, Battery	1	

9-2 Electrical Harness (Battery)

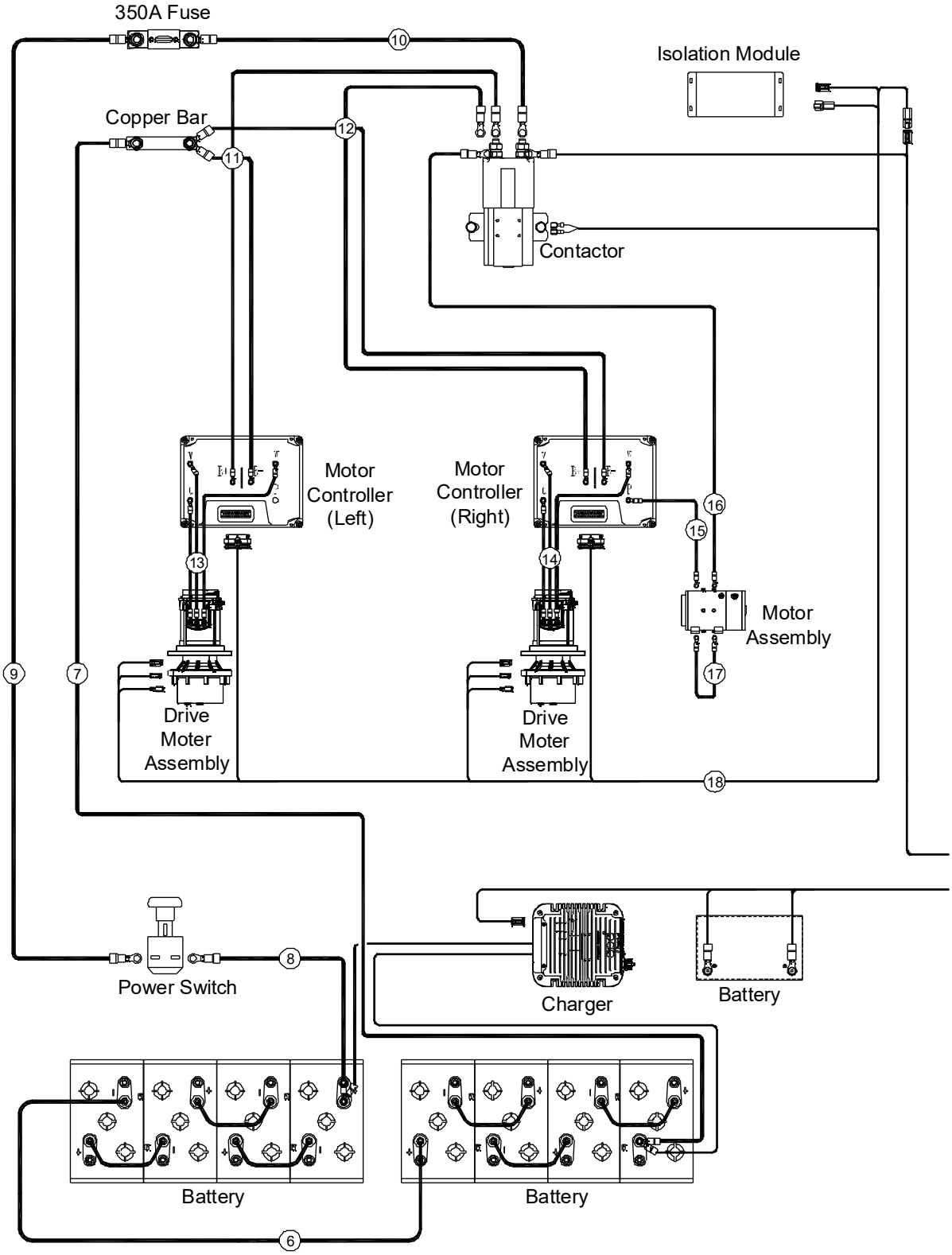

9-2 Electrical Harness (Battery) (Continued)

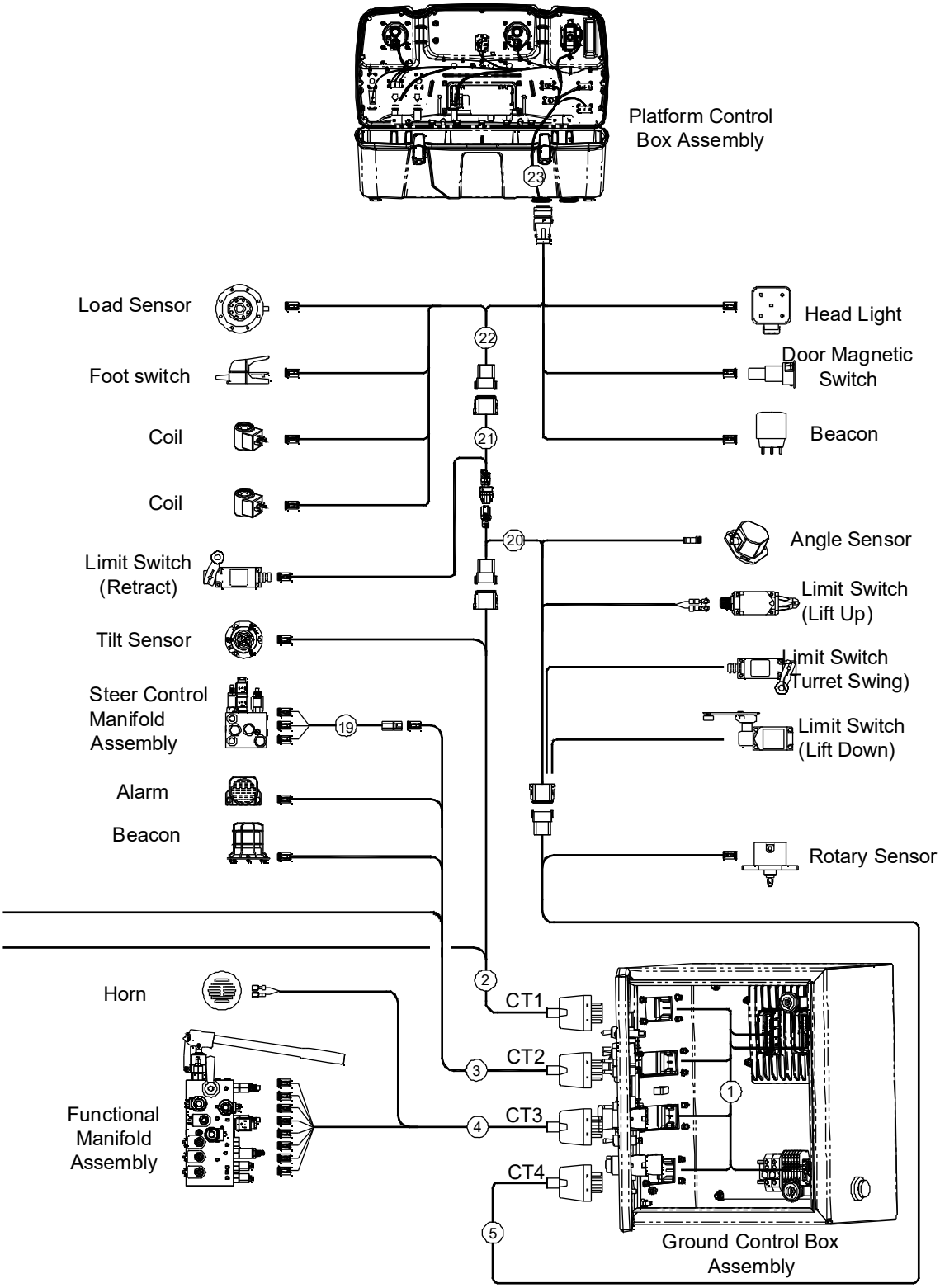

9-2 Electrical Harness (Battery)

Item	Part Number	Description	Qty.	Remark
1	00009998	Ground Control Box Harness	1	
2	00009747	CT1 Harness	1	
3	00009758	CT2 Harness	1	
4	00009759	CT3 Harness	1	
5	00009766	CT4 Harness	1	
6	00006923	Battery Harness	1	
7	00004789	Battery Negative Harness	1	
8	00004787	Battery Positive Harness	1	
9	00004788	Fuse Harness	1	
10	00004790	Contactor Harness	1	
11	00004791	Drive Controller Power Harness1	1	
12	00004792	Drive Controller Power Harness 2	1	
13	00004795	Drive Motor Harness 1	1	
14	00005170	Drive Motor Harness 2	1	
15	00004794	Pump Motor Negative Harness	1	
16	00004793	Pump Motor Positive Harness	1	
17	00005469	Pump Motor Connect Harness	1	
18	00009761	Drive Controller Harness	1	
19	00009762	Steer Valve Harness	1	
20	00008066	Boom harness 1	1	
21	00009765	Boom harness 2	1	
22	00009764	Platform Harness	1	
23	00009763	Platform Control Box Harness	1	

Zhejiang Dingli Machinery Co., Ltd.

No.188 Qihang Road. Deqing Zhejiang P.R.

China 313219

Tel: +86-572-8681688

Fax: +86-572-8681690

Web: www.cndingli.com

E-mail:market@cndingli.com

DINGLI